# Disconnect Switches


***Series L7 - Motor Disconnect Switches up to 100A***.....*L2*
*Handles & Accessories*.....*L10*
***Series L7 Enclosed*** *Disconnect Switches*.....*L14*
*Technical Information & Dimensions (Online)*.....*L18*

***Series L11 - Fusible and Non-Fusible Disconnects 30…1200A***.....*L27*
*Handles & Accessories*.....*L30*
***Series L11 Enclosed*** *Disconnect Switches*.....*L35*
*Application Methods, Technical Information & Dimensions (Online)*.....*L36*

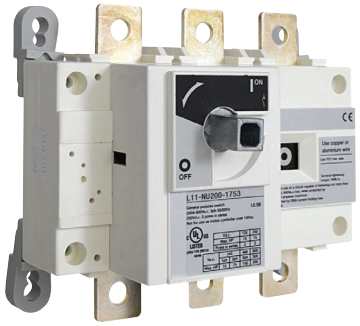

# Series L7 Motor Disconnect Switches up to 100A

Sprecher + Schuh's L7 line incorporates the latest modular design techniques to provide maximum functionality with the fewest number of parts. These rugged switches are compact, reliable and the ideal choice for all disconnect applications including motor disconnects per UL-508 Part III. A device under this UL listing meets the requirements as a motor controller or "at motor disconnect."

## UL508 approved device "suitable as motor disconnect"

## Just the right switch for your application

L7 Disconnect Switches are available in four frame sizes up to 100 amps. The smaller L7s come in six pole models, as well as three pole change-over switches. A full complement of switch handles and accessories including auxiliary contact blocks, ground and neutral terminals make the L7 line broad enough to tackle virtually any disconnect duty.

## Meets the toughest safety standards

A generous 9mm gap between open contacts, combined with high short circuit withstand capabilities ensures a minimum probability of welding. All switches are touch safe to IP20, while most switch handles are rated for strong water jets to IP66. Excellent making and breaking characteristics provide a level of safety that, in many cases, exceeds international standards.

## Modular, flexible and easy to assemble

The versatile L7 line is fully modular. All accessories snap-on and off without the use of tools, speeding assembly. The L7's modular design minimizes inventory with features such as universal auxiliary contact blocks… virtually every block fits all frame sizes. Both metal and plastic shaft extension systems are available to accommodate most panel depths.

## International standards and approvals

L7 Motor Disconnect Switches are UL Listed (UL508, Part III) and CSA approved (C22.2 No. 14). They also carry the CE Mark and meet IEC 947-1, 947-3, as well as IEC 207 requirements. They are approved in virtually every international market.

**TIP!**

*To learn the basic differences between control, load and fusible disconnect switches and how to apply them, see our white paper Tech-LMSD in the online library.*

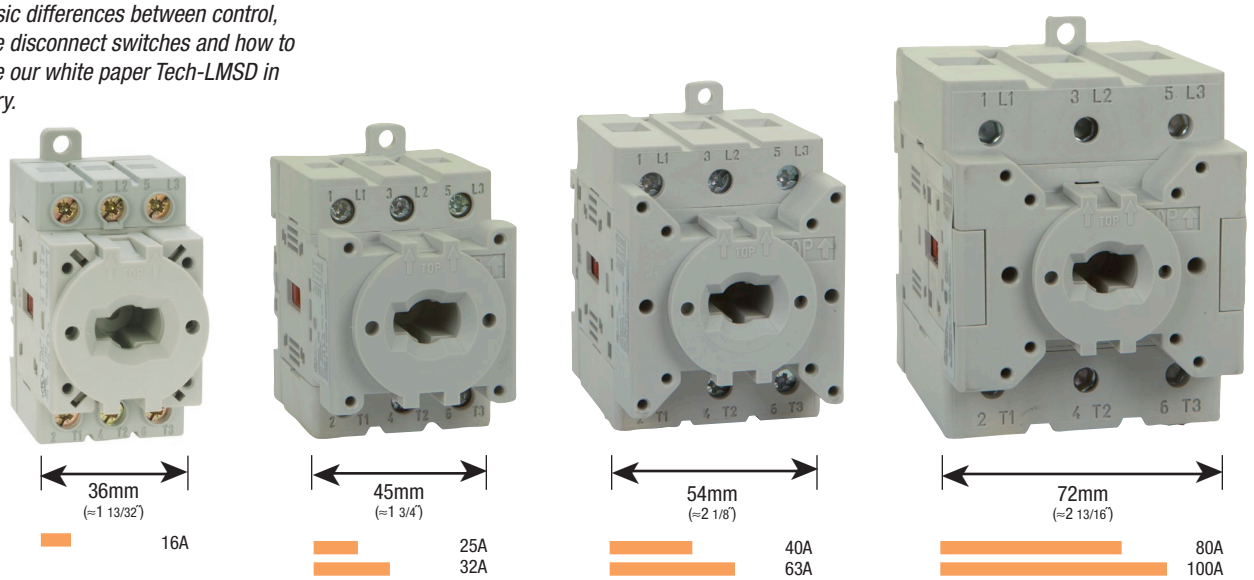

## Full range of enclosed disconnects for any job

From "do-it-yourself" to fully assembled, we offer a complete selection of three, four and six pole enclosed disconnects for any industrial application.

The most economical choice is to configure your own design (Figure 1) by selecting one of the non-UL/CSA Approved ABS or Noryl enclosures from page L17 and completing it with your choice of L7 switch from pages L4 …L6. These enclosed disconnects are suitable for use in NEMA 4 type applications (not UL Listed).

An assembled version of this enclosed disconnect is available with LA7 three or six poles from page L6 (Figure 2). A broad selection of assembled UL Enclosed disconnects are available on pages L14 and L15. Painted metal, stainless steel, polyester-fiberglass, and ABS (IP66) enclosures with three, four and six pole disconnect switches are available with all accessories (Figure 3).

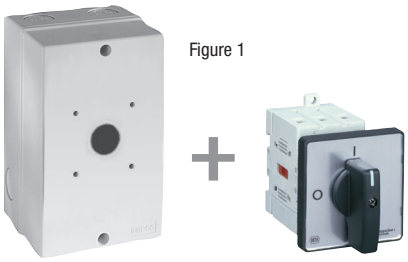

Figure 1

Figure 2

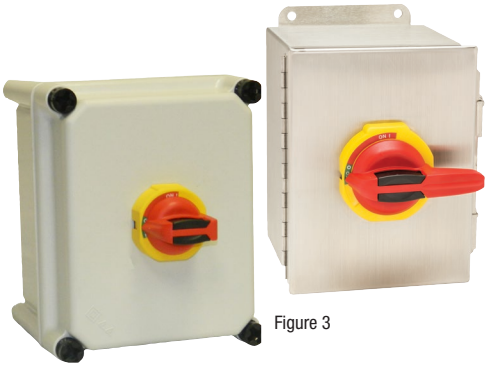

Figure 3

## How to order L7 motor disconnect switches

A complete L7 Motor Disconnect Switch is ordered with as little as two catalog numbers. The first number specifies the switch body and the second specifies the switch handle assembly. All L7 switch bodies come standard with a shaft and mounting screws for the switch handle assembly. Accessories such as shaft extensions and auxiliary contact blocks are ordered separately.

First determine the switch you need from pages L4…L6. Then turn to page L8 and L9 to choose a switch handle assembly.

If necessary, see page L12 and L13 to determine the type and length of shaft extension you require.

Auxiliary contact blocks, fourth poles, ground terminals and neutral terminals are found on page L10.

*Side Mount Accessories - page L10*
*Miscellaneous Accessories - page L11*

*Modular Shaft Extensions (LA only) - page L12*
*Metal Shaft Extensions (LA only) - page L13*

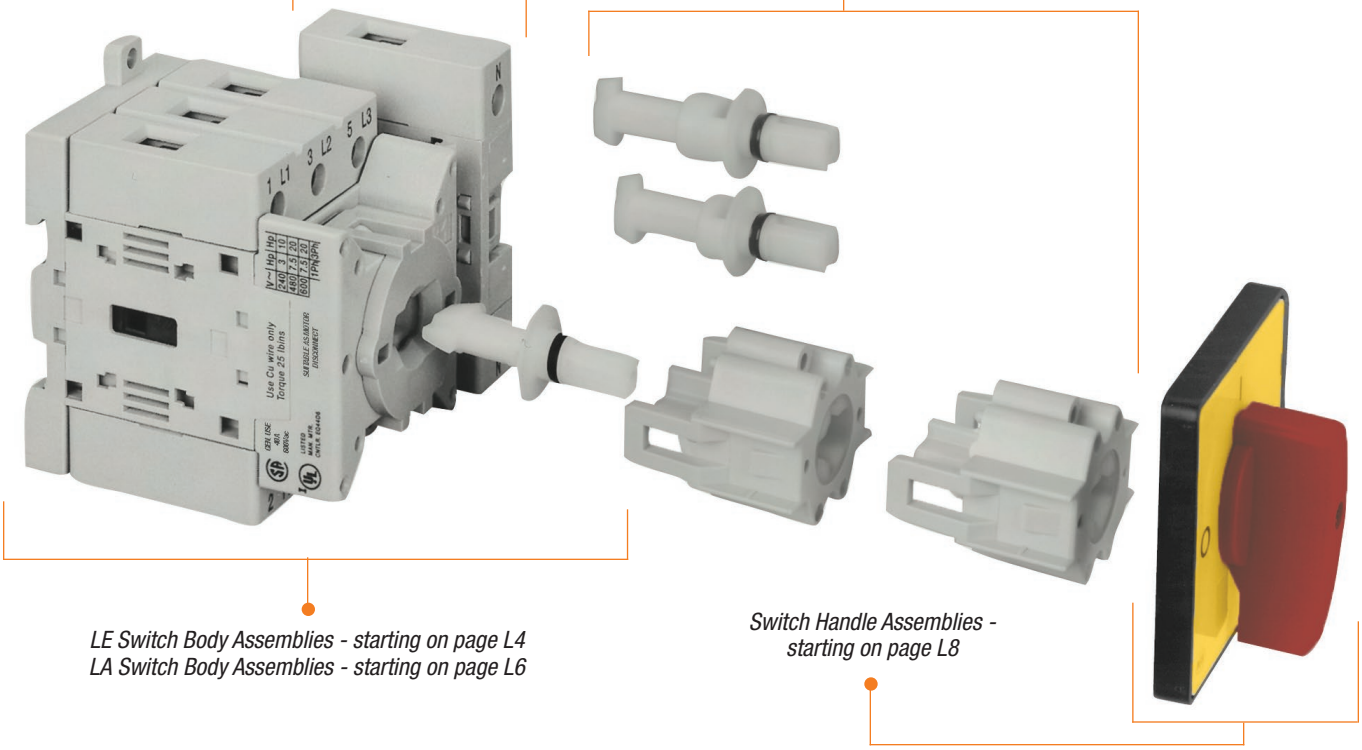

*LE Switch Body Assemblies - starting on page L4*
*LA Switch Body Assemblies - starting on page L6*

*Switch Handle Assemblies - starting on page L8*

## Front Mounted 3 Pole Switches - 90º Throw ❶❸

*3 Pole*

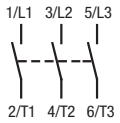


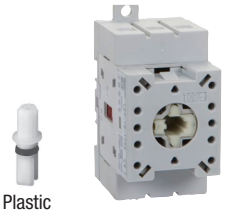

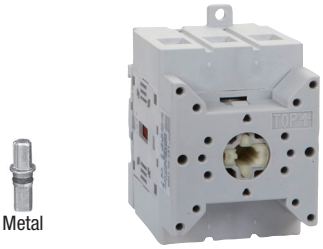


| | Catalog Number | Price | Catalog Number | Price | Catalog Number | Price | Catalog Number | Price | Catalog Number | Price |
|---|---|---|---|---|---|---|---|---|---|---|
| **3 Pole ›** | **LE7-16-1753** | **57.52** | **LE7-25-1753** | **70.88** | **LE7-32-1753** | **74.99** | **LE7-40-1753** | **93.48** | **LE7-63-1753** | **105.80** |
| Amp Rating (encl.) | | | | | | | | | | |
| UL/CSA | 16 | | 25 | | 32 | | 40 | | 63 | |
| IEC/VDE/BS | 16 | | 25 | | 32 | | 40 | | 63 | |
| 3Ø Horsepower | | | | | | | | | | |
| 240V | 3 | | 5 | | 7.5 | | 10 | | 15 | |
| 480V | 7.5 | | 10 | | 15 | | 20 | | 25 | |
| 600V | 10 | | 10 | | 15 | | 20 | | 25 | |
| 1Ø Horsepower | | | | | | | | | | |
| 120V | 1 | | 1 | | 1 | | 2 | | 3 | |
| 240V | 2 | | 2 | | 3 | | 3 | | 5 | |
| Dimension - mm (inches) | 63 (2-31/64) - Height<br>36 (1-27/64) - Width<br>51 (2-1/64) - Depth ❷ | | 63 (2-31/64) - Height<br>45 (1-49/64) - Width<br>60 (2-23/64) - Depth ❷ | | | | 72 (2-55/64) - Height<br>54 (2-1/8) - Width<br>74 (2-29/32) - Depth ❷ | | | |

*3 Pole*

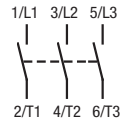


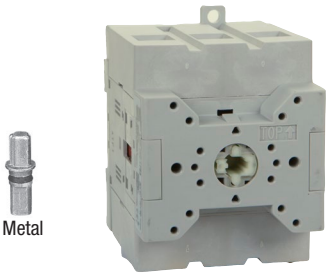


| | Catalog Num. | Price | Catalog Num. | Price |
|---|---|---|---|---|
| **3 Pole ›** | **LE7-80-1753** | **168.46** | **LE7-100-1753** | **218.79** |
| Amp Rating (encl.) | | | | |
| UL/CSA | 80 | | 100 | |
| IEC/VDE/BS | 80 | | 100 | |
| 3Ø Horsepower | | | | |
| 240V | 25 | | 30 | |
| 480V | 40 | | 50 | |
| 600V | 50 | | 50 | |
| 1Ø Horsepower | | | | |
| 120V | 5 | | 7.5 | |
| 240V | 10 | | 15 | |
| Dimension - mm (inches) | 90 (3-35/64) - Height<br>72 (2-27/32) - Width<br>90 (3-35/64) - Depth ❷ | | | |

❶ Fourth pole side-mounted module available. See page L10.
❷ Dimension without shaft.

❸ Switch Handle position

## Front Mounted 3 Pole Changeover Switches and 6 Pole Switches - 90º Throw ❶

*Changeover*
*(Center OFF)*

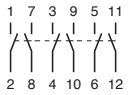


*6 Pole*

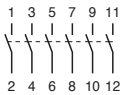


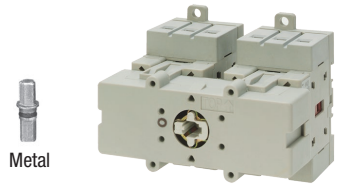


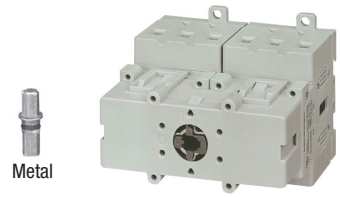


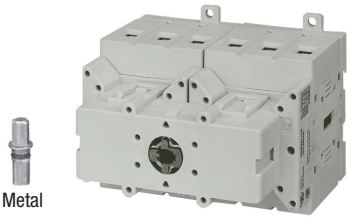


| | Catalog Number | Price | Catalog Number | Price | Catalog Number | Price | Catalog Number | Price | Catalog Number | Price |
|---|---|---|---|---|---|---|---|---|---|---|
| **Changeover ›** | **LE7-16-3753** | **97.59** | **LE7-25-3753** | **128.40** | **LE7-32-3753** | **141.75** | **LE7-40-3753** | **177.71** | **LE7-63-3753** | **203.38** |
| **6 Pole ›** | **LE7-16-1756** | **115.04** | **LE7-25-1756** | **142.78** | **LE7-32-1756** | **146.89** | **LE7-40-1756** | **186.95** | **LE7-63-1756** | **209.54** |
| Amp Rating (encl.) | | | | | | | | | | |
| UL/CSA | 16 | | 25 | | 32 | | 40 | | 63 | |
| IEC/VDE/BS | 16 | | 25 | | 32 | | 40 | | 63 | |
| 3Ø Horsepower | | | | | | | | | | |
| 240V | 3 | | 5 | | 7.5 | | 10 | | 15 | |
| 480V | 7.5 | | 10 | | 15 | | 20 | | 25 | |
| 600V | 10 | | 10 | | 15 | | 20 | | 25 | |
| 1Ø Horsepower | | | | | | | | | | |
| 120V | 1 | | 1 | | 1 | | 2 | | 3 | |
| 240V | 2 | | 2 | | 1 | | 3 | | 5 | |
| Dimension - mm (inches) | 63 (2-31/64) - Height<br>90 (3-35/64) - Width<br>76 (3) - Depth ❷ | | 63 (2-31/64) - Height<br>90 (3-35/64) - Width<br>85 (3-11/32) - Depth ❷ | | | | 72 (2-55/64) - Height<br>108 (4-1/4) - Width<br>99 (3-57/64) - Depth ❷ | | | |

*Changeover*
*(Center OFF)*

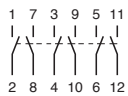


*6 Pole*

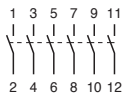


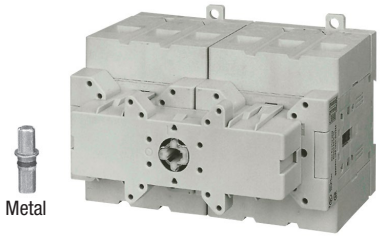


| | Catalog Number | Price | Catalog Number | Price |
|---|---|---|---|---|
| **Changeover ›** | **LE7-80-3753** | **305.08** | **LE7-100-3753** | **398.55** |
| **6 Pole ›** | **LE7-80-1756** | **333.84** | **LE7-100-1756** | **437.58** |
| Amp Rating (encl.) | | | | |
| UL/CSA | 80 | | 100 | |
| IEC/VDE/BS | 80 | | 100 | |
| 3Ø Horsepower | | | | |
| 240V | 25 | | 30 | |
| 480V | 40 | | 50 | |
| 600V | 50 | | 50 | |
| 1Ø Horsepower | | | | |
| 120V | 5 | | 7.5 | |
| 240V | 10 | | 15 | |
| Dimension - mm (inches) | 90 (3-35/64) - Height<br>144 (5-43/64) - Width<br>115 (4-17/32) - Depth ❷ | | | |

❶ 3 Pole Changeover Switch has center OFF – 1 0 2
❷ Dimension without shaft.

## Base Mounted 3 Pole Switches - 90º Throw ❶❸

*3 Pole*

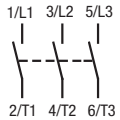


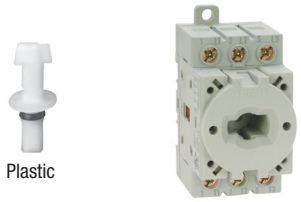

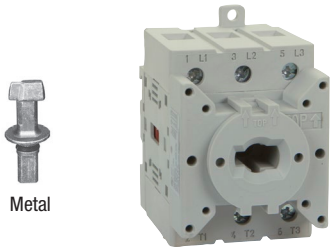


| | Catalog Number | Price | Catalog Num. | Price | Catalog Num. | Price | Catalog Num. | Price | Catalog Num. | Price |
|---|---|---|---|---|---|---|---|---|---|---|
| **3 Pole ›** | **LA7-16-1753** | **68.83** | **LA7-25-1753** | **82.17** | **LA7-32-1753** | **89.37** | **LA7-40-1753** | **105.80** | **LA7-63-1753** | **132.51** |
| Amp Rating (encl.) | | | | | | | | | | |
| UL/CSA | 16 | | 25 | | 32 | | 40 | | 63 | |
| IEC/VDE/BS | 16 | | 25 | | 32 | | 40 | | 63 | |
| 3Ø Horsepower | | | | | | | | | | |
| 240V | 3 | | 5 | | 7.5 | | 10 | | 15 | |
| 480V | 7.5 | | 10 | | 15 | | 20 | | 25 | |
| 600V | 10 | | 10 | | 15 | | 20 | | 25 | |
| 1Ø Horsepower | | | | | | | | | | |
| 120V | 1 | | 1 | | 1 | | 2 | | 3 | |
| 240V | 2 | | 2 | | 3 | | 3 | | 5 | |
| Dimension - mm (inches) | 63 (2-31/64) - Height<br>36 (1-27/64) - Width<br>51 (2-1/64) - Depth ❷ | | 63 (2-31/64) - Height<br>45 (1-49/64) - Width<br>60 (2-23/64) - Depth ❷ | | | | 72 (2-55/64) - Height<br>54 (2-1/8) - Width<br>74 (2-29/32) - Depth ❷ | | | |

*3 Pole*

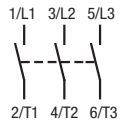


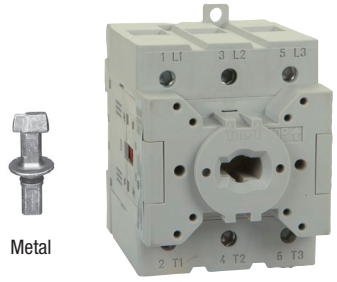


| | Catalog Num. | Price | Catalog Num. | Price |
|---|---|---|---|---|
| **3 Pole ›** | **LA7-80-1753** | **191.06** | **LA7-100-1753** | **233.17** |
| Amp Rating (encl.) | | | | |
| UL/CSA | 80 | | 100 | |
| IEC/VDE/BS | 80 | | 100 | |
| 3Ø Horsepower | | | | |
| 240V | 25 | | 30 | |
| 480V | 40 | | 50 | |
| 600V | 50 | | 50 | |
| 1Ø Horsepower | | | | |
| 120V | 5 | | 7.5 | |
| 240V | 10 | | 15 | |
| Dimension - mm (inches) | 90 (3-35/64) - Height<br>72 (2-27/32) - Width<br>90 (3-35/64) - Depth ❷ | | | |

❶ Fourth pole side-mounted module available. See page L10.
❷ Dimension without shaft.

❸ Switch Handle position

## Base Mounted 3 Pole Changeover and 6 Pole Switches - 90º Throw ❶❸

*Changeover*
*(Center OFF)*

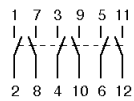


*6 Pole*

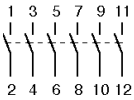


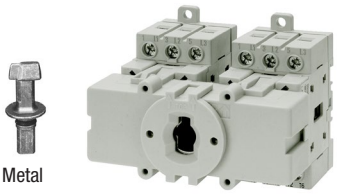


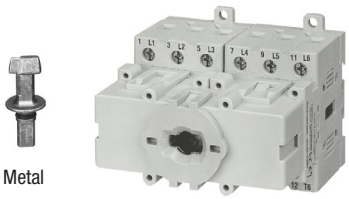


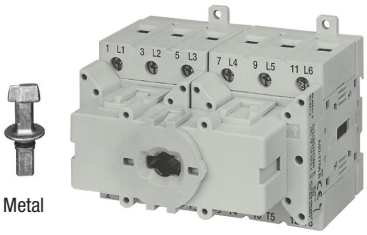


| | Catalog Number | Price | Catalog Number | Price | Catalog Number | Price | Catalog Number | Price | Catalog Number | Price |
|---|---|---|---|---|---|---|---|---|---|---|
| **Changeover ❯** | **LA7-16-3753** | **110.94** | **LA7-25-3753** | **141.75** | **LA7-32-3753** | **162.29** | **LA7-40-3753** | **205.44** | **LA7-63-3753** | **257.83** |
| **6 Pole ❯** | **LA7-16-1756** | **136.62** | **LA7-25-1756** | **164.35** | **LA7-32-1756** | **183.87** | **LA7-40-1756** | **213.65** | **LA7-63-1756** | **269.12** |
| Amp Rating (encl.) | | | | | | | | | | |
| UL/CSA | 16 | | 25 | | 32 | | 40 | | 63 | |
| IEC/VDE/BS | 16 | | 25 | | 32 | | 40 | | 63 | |
| 3Ø Horsepower | | | | | | | | | | |
| 240V | 3 | | 5 | | 7.5 | | 10 | | 15 | |
| 480V | 7.5 | | 10 | | 15 | | 20 | | 25 | |
| 600V | 10 | | 10 | | 15 | | 20 | | 25 | |
| 1Ø Horsepower | | | | | | | | | | |
| 120V | 1 | | 1 | | 1 | | 2 | | 3 | |
| 240V | 2 | | 2 | | 3 | | 3 | | 5 | |
| Dimension - mm (inches) | 63 (2-31/64) - Height<br>90 (3-35/64) - Width<br>85 (3-11/32) - Depth ❷ | | 63 (2-31/64) - Height<br>90 (3-35/64) - Width<br>89 (3-1/2) - Depth ❷ | | | | 72 (2-55/64) - Height<br>108 (4-1/4) - Width<br>103 (4-1/16) - Depth ❷ | | | |

*Changeover*
*(Center OFF)*

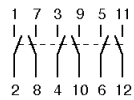


*6 Pole*

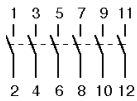


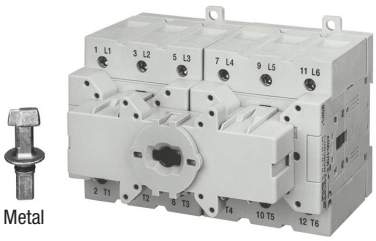


| | Catalog Num. | Price | Catalog Num. | Price |
|---|---|---|---|---|
| **Changeover ❯** | **LA7-80-3753** | **343.08** | **LA7-100-3753** | **426.28** |
| **6 Pole ❯** | **LA7-80-1756** | **381.09** | **LA7-100-1756** | **470.45** |
| Amp Rating (encl.) | | | | |
| UL/CSA | 80 | | 100 | |
| IEC/VDE/BS | 80 | | 100 | |
| 3Ø Horsepower | | | | |
| 240V | 25 | | 30 | |
| 480V | 40 | | 50 | |
| 600V | 50 | | 50 | |
| 1Ø Horsepower | | | | |
| 120V | 5 | | 7.5 | |
| 240V | 10 | | 15 | |
| Dimension - mm (inches) | 90 (3-35/64) - Height<br>144 (5-43/64) - Width<br>119 (4-17/32) - Depth ❷ | | | |

❶ 3 Pole Changeover Switch has center OFF – 1 0 2
❷ Dimension without shaft.
❸ Insert LA2-G3399 is required for 3-position changeover switches when using LA2-G339_ metal shaft extensions.

## Switch Handle Assemblies (LA and LE Switches)

| Switch Handle Assembly ❶ | Color | Mounting Method | Protection Rating | For use with... | Frame Size | Legend ❷ | Catalog Number | Price |
|---|---|---|---|---|---|---|---|---|
| Type A | Silver Legend ❷ Black Knob | Screw Fixing ❶ | Type 12, IP66 | LA/LE7-16...63A | 48 X 48 | 0-I<br>OFF-ON<br>1-0-2 ❹ | **LFS2-A-4-175**<br>**LFS2-A-4-175I**<br>**LFS2-A-4-375** | **9.79** |
| | | | Type 12, IP66 | LA/LE7-25...100A ❺ | 64 X 64 | 0-I<br>OFF-ON<br>1-0-2 ❹ | **LFS2-A-6-175**<br>**LFS2-A-6-175I**<br>**LFS2-A-6-375** | **12.90** |
| | | | Type 12, IP66 | LA/LE7-40...100A | 88 X 88 | 0-I<br>OFF-ON<br>1-0-2 ❹ | **LFS2-A-8-175** ❻<br>**LFS2-A-8-175I** ❻<br>**LFS2-A-8-375** | **37.80** |
| | | Central Nut | Type 12, IP66 | LE7-16...63A | 48 X 48 | 0-I<br>OFF-ON | **LFC2-A-4-175**<br>**LFC2-A-4-175I** | **13.60** |
| Type E | Silver Legend ❷ Black Knob ❸ | Screw Fixing ❶ | Type 12, IP66 | LA/LE7-16...63A | 48 X 48 | 0-I<br>OFF-ON<br>1-0-2 ❹ | **LFS2-E-4-175**<br>**LFS2-E-4-175I**<br>**LFS2-E-4-375** | **14.70** |
| | | | Type 12, IP66 | LA/LE7-25...100A ❺ | 64 X 64 | 0-I<br>OFF-ON<br>1-0-2 ❹ | **LFS2-E-6-175**<br>**LFS2-E-6-175I**<br>**LFS2-E-6-375** | **18.20** |
| | | Central Nut | Type 12, IP66 | LE7-16...63A | 48 X 48 | 0-I<br>OFF-ON | **LFC2-E-4-175**<br>**LFC2-E-4-175I** | **15.60** |
| Type I | Yellow Legend ❷ Red Knob | Screw Fixing ❶ | Type 12, IP66 | LA/LE7-16...63A | 48 X 48 | 0-I<br>OFF-ON<br>1-0-2 ❹ | **LFS2-I-4-175**<br>**LFS2-I-4-175I**<br>**LFS2-I-4-375** | **9.79** |
| | | | Type 12, IP66 | LA/LE7-25...100A ❺ | 64 X 64 | 0-I<br>OFF-ON<br>1-0-2 ❹ | **LFS2-I-6-175**<br>**LFS2-I-6-175I**<br>**LFS2-I-6-375** | **12.90** |
| | | | Type 12, IP66 | LA/LE7-40...100A | 88 X 88 | 0-I<br>OFF-ON<br>1-0-2 ❹ | **LFS2-I-8-175** ❻<br>**LFS2-I-8-175I** ❻<br>**LFS2-I-8-375** | **37.80** |
| | | Central Nut | Type 12, IP66 | LE7-16...63A | 48 X 48 | 0-I<br>OFF-ON | **LFC2-I-4-175**<br>**LFC2-I-4-175I** | **15.60** |
| Type L | Yellow Legend ❷ Red Knob ❸ | Screw Fixing ❶ | Type 12, IP66 | LA/LE7-16...63A | 48 X 48 | 0-I<br>OFF-ON<br>1-0-2 ❹ | **LFS2-L-4-175**<br>**LFS2-L-4-175I**<br>**LFS2-L-4-375** | **14.70** |
| | | | Type 12, IP66 | LA/LE7-25...100A ❺ | 64 X 64 | 0-I<br>OFF-ON | **LFS2-L-6-175**<br>**LFS2-L-6-175I** | **18.00** |
| | | Central Nut | Type 12, IP66 | LE7-16...63A | 48 X 48 | 0-I<br>OFF-ON | **LFC2-L-4-175**<br>**LFC2-L-4-175I** | **15.60** |

❶ Mounting screws included with Switch Body Assembly.
❷ For blank legend plate, substitute "000" for last three digits in catalog number. Example: LFS2-A-4-000.
❸ Lockable in OFF position, ON position or both.
❹ Only for use with 3 Pole Changeover switch.
❺ Only for use with LA/LE7-25…63 three pole Changeover Switches. Use 88 x 88 Switch Handle for 80 and 100A Changeover Switch.
❻ This handle cannot be used on a mechanical coupling accessory L2-G3* when coupling any LE7 switches. Must select smaller 48x48 or 64x64 type handles for LE7 coupling applications.

## Switch Handle Assemblies (LA and LE Switches)

| Switch Handle Assembly ❶ | Color | Mounting Method | Protection Rating | For use with... | Frame Size | Legend ❷ | Catalog Number | Price |
|---|---|---|---|---|---|---|---|---|
| Type G | Gray Frame Black Handle ❷ | Screw Fixing ❶ | Type 12, IP66 | LA/LE7-16 | 54 x 54 | 0 OFF — I ON | **LFS7-G-4-175** | **14.30** |
| | | | Type 12, IP66 | LA7-16…100A LE7-25…100A | 67 x 67 | 0 OFF — I ON | **LFS2-G-6-175** | **24.20** |
| | | | Type 12, IP66 | LA/LE7-40...100A | 90 x 90 | 0 OFF — I ON | **LFS2-G-8-175 ❻** | **44.30** |
| | | Central Nut | Type 12, IP66 | LE7-16...63A | 67 x 67 | 0 OFF — I ON | **LFC2-G-6-175** | **27.30** |
| Type N | Yellow Frame Red Handle ❷ | Screw Fixing ❶ | Type 12, IP66 | LA/LE7-16 | 54 x 54 | 0 OFF — I ON | **LFS7-N-4-175** | **14.30** |
| | | | Type 12, IP66 | LA7-16…100A LE7-25…100A | 67 x 67 | 0 OFF — I ON | **LFS2-N-6-175** | **24.20** |
| | | | Type 12, IP66 | LA/LE7-40...100A | 90 x 90 | 0 OFF — I ON | **LFS2-N-8-175 ❻** | **44.30** |
| | | Central Nut | Type 12, IP66 | LE7-16...63A | 67x67 | 0 OFF — I ON | **LFC2-N-6-175** | **27.30** |

## Switch Handle Assemblies for LA7 Switches - Type 4/4X ❸

| Switch Handle Assembly | Mounting Method | Protection Rating | For use with... | Frame Size | Legend ❷ | Color | Catalog Number | Price |
|---|---|---|---|---|---|---|---|---|
| Type R | Screw Fixing Configurable for defeatable or non-defeatable ❹❺ | Type 3R, 3, 12, 4, 4X IP66 | LA7-16...100A | 48.7 x 47 | 0 OFF — I ON | Black Frame Black Handle | **LA7-SB** | **45.40** |
| | | Type 3R, 3, 12, 4, 4X IP66 | | 48.7 x 47 | 0 OFF — I ON | Yellow Frame Red Handle | **LA7-SY** | **45.40** |
| Type R ❶ | Screw Fixing Configurable for defeatable or non-defeatable ❶❹❺ | Type 3R, 3, 12, 4, 4X | LA7-16...100A | 80 x 114 | 0 OFF — I ON | Black Frame Black Handle | **L11-PB** | **See page L30** |
| | | Type 3R, 3, 12, 4, 4X | | 80 x 114 | 0 OFF — I ON | Yellow Frame Red Handle | **L11-PY** | **See page L30** |

❶ Mounting screws included with Switch Body Assembly.
❷ Lockable in OFF position with up to 3 padlocks.
❸ For LA7 base mount switches only.
❹ Switch handle can be field modified to be defeatable or non-defeatable.
❺ Handles LA7-S_ and L11-P_ require R-type Switch Handle Shaft Extension. See page L13.
❻ This handle cannot be used on a mechanical coupling accessory L2-G3* when coupling any LE7 switches. Must select smaller 48x48 or 64x64 type handles for LE7 coupling applications.

## Auxiliary Contact Blocks ❷

| Aux. Contact Block | Contact Configuration | For use with... | Catalog Number | Price |
|---|---|---|---|---|
| **One NO (Early Break) ❶** | | | | |
| | 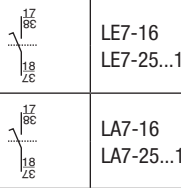 | LE7-16<br>LE7-25...100 | **LE7-16-P-D10**<br>**LE7-P-D10** | **43.40**<br>**43.40** |
| |  | LA7-16<br>LA7-25...100 | **LA7-16-P-D10**<br>**LA7-P-D10** | **43.40**<br>**43.40** |
| **One NO and One NC (Instantaneous)** | | | | |
| | | LE7-16...100 | **LE7-P-11** | **43.40** |
| | | LA7-16...100 | **LA7-P-11** | **43.40** |
| **One NOEM and One NCLB (Make Before Break)** | | | | |
| | | LE7-16...100 | **LE7-PL-11** | **43.40** |
| | | LA7-16...100 | **LA7-PL-11** | **43.40** |
| **Two NO and Two NC (Instantaneous)** | | | | |
| | 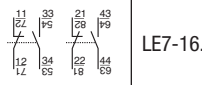 | LE7-16...100 | **LE7-P-22** | **86.90** |
| | 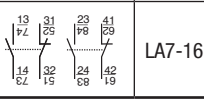 | LA7-16...100 | **LA7-P-22** | **86.90** |

## Fourth Pole ❷

| Fourth Pole | Contact Configuration | For use with... | Catalog Number | Price |
|---|---|---|---|---|
| **Early Make-Late Break** | | | | |
| | | LE7-16<br>LE7-25<br>LE7-32<br>LE7-40<br>LE7-63<br>LE7-80<br>LE7-100 | **LE7-16-NP**<br>**LE7-25-NP**<br>**LE7-32-NP**<br>**LE7-40-NP**<br>**LE7-63-NP**<br>**LE7-80-NP**<br>**LE7-100-NP** | **27.00**<br>**29.90**<br>**37.00**<br>**41.00**<br>**49.30**<br>**57.50**<br>**72.70** |
| | | LA7-16<br>LA7-25<br>LA7-32<br>LA7-40<br>LA7-63<br>LA7-80<br>LA7-100 | **LA7-16-NP**<br>**LA7-25-NP**<br>**LA7-32-NP**<br>**LA7-40-NP**<br>**LA7-63-NP**<br>**LA7-80-NP**<br>**LA7-100-NP** | **27.00**<br>**29.90**<br>**37.00**<br>**41.00**<br>**49.30**<br>**57.50**<br>**72.70** |

## Ground & Neutral Terminals ❷

| Terminal | Contact Configuration | For use with... | Catalog Number | Price |
|---|---|---|---|---|
| **Ground Terminal** | | | | |
| | | LA7-16<br>LA7-25 & 32<br>LA7-40 & 63<br>LA7-80 & 100 | **LA7-16-PE**<br>**LA7-32-PE**<br>**LA7-63-PE**<br>**LA7-100-PE** | **22.20**<br>**22.50**<br>**29.90**<br>**45.20** |
| | | LE7-16<br>LE7-25 & 32<br>LE7-40 & 63<br>LE7-80 & 100 | **LE7-16-PE**<br>**LE7-32-PE**<br>**LE7-63-PE**<br>**LE7-100-PE** | **22.20**<br>**22.20**<br>**29.70**<br>**43.40** |
| **Neutral Terminal** | | | | |
| |  | LA7-16<br>LA7-25 & 32<br>LA7-40 & 63<br>LA7-80 & 100 | **LA7-16-TN**<br>**LA7-32-TN**<br>**LA7-63-TN**<br>**LA7-100-TN** | **22.20**<br>**22.50**<br>**29.90**<br>**45.20** |
| | | LE7-16<br>LE7-20 & 32<br>LE7-40 & 63<br>LE7-80 & 100 | **LE7-16-TN**<br>**LE7-32-TN**<br>**LE7-63-TN**<br>**LE7-100-TN** | **22.20**<br>**22.20**<br>**49.30**<br>**43.40** |

❶ All N.O. Early Break Contact Blocks mount on the left and/or right side by themselves, or with -NP, -PE, -TN aux on the opposite side. Stacking additional aux contacts on these blocks is not possible.

❷ A maximum of two side-mount accessories may be added to an L7 switch (one on each side)

# Accessory Mounting Guide

Various accessories can be mounted simultaneously on both the LA7 (base mount) and LE7 (front mount) switch bodies. The drawings below illustrate which combinations are possible.

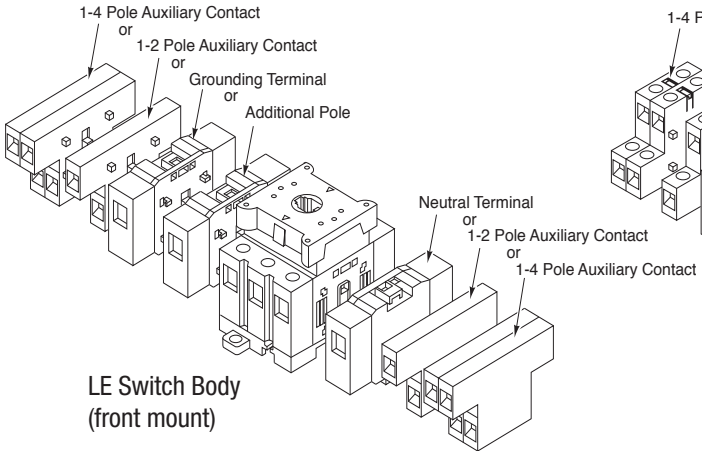


LE Switch Body
(front mount)

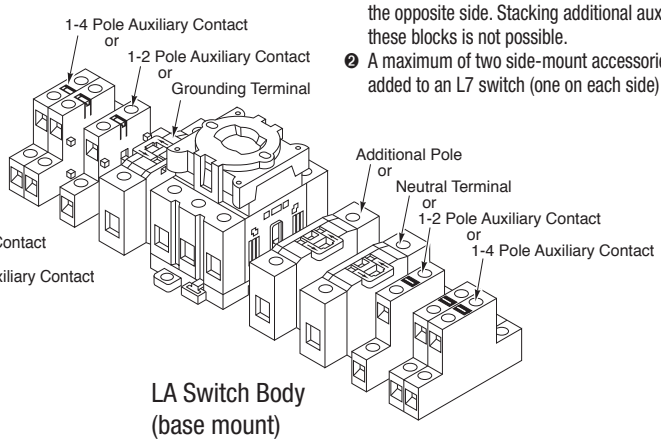


LA Switch Body
(base mount)

## L7 Switch Accessories

| Accessory | Description | Catalog Number | Price Each |
|---|---|---|---|
| (Reducer included) | **End Shaft** - for LE switch ❷<br>• Replacement 44mm shaft supplied standard with all switches<br>• **Sold only in packages of 5. Order 5 pieces to receive 1 pkg of 5.** | | |
| | Plastic | **L2-G3380** | **5.26** |
| | Metal | **L7-G3688 ❶** | **10.60** |
| 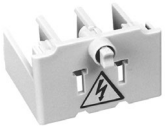 | **Terminal cover** - 3 pole | | |
| | LE/LA7-16 | **L7-16-C3** | **7.75** |
| | LE/LA7-25/32 | **L7-25-C3** | **8.83** |
| | LE/LA7-40/63 | **L7-40-C3** | **10.60** |
| | LE/LA7-80/100 | **L7-80-C3** | **14.50** |
| 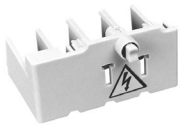 | **Terminal cover** - 4 pole | | |
| | LE/LA7-25/32 | **L7-25-C4** | **10.60** |
| | LE/LA7-40/63 | **L7-40-C4** | **13.80** |
| | LE/LA7-80/100 | **L7-80-C4** | **18.80** |
| | **6 Pole Mechanical Coupling** - ❷❸<br>joins two L7 switches (front or base mount) to form a 6 pole switch (includes 44 mm metal End Shafts for both LE and LA switch) | | |
| | LE7-16 | **L7-G3821** | **32.90** |
| | LE/LA7-25 & 32 | **L7-G3660** | **41.30** |
| | LE/LA7-40 & 63 | **L7-G3661** | **48.20** |
| | LE/LA7-80 & 100 | **L7-G3662** | **50.80** |
| | **Snap-on Nameplate & Holder**<br>Snaps on to switch handle frames of the following sizes: | | |
| | For 48x48, 64x64 & 67x67 | **L2-G3667** | **5.78** |
| | **Nameplate for Snap-on Holder**<br>fits cat. # L2-G3667 & L2-G3515 | | |
| | For L2-G3667 "Main Switch" | **L2-G3667A** | **5.78** |
| | "Emergency Off" | **L2-G3667H** | **5.78** |
| | For L2-G3515 "Main Switch" | **L2-G3515A** | **10.10** |
| | "Emergency Off" | **L2-G3515H** | **10.10** |
| | **Handle Assembly Wrench**<br>Used for tightening LA7-S-_ handles during assembly | **LA7-N245** | **45.40** |

❶ LE7-40…100 3-pole switches and LE7-16…100 6-pole/Changeover switches come standard with a 44mm **metal** End Shaft. LE7-16…32 3-pole switches come standard with a 44mm **plastic** End Shaft.

❷ When using mechanical coupler to join two LE7 or LA7 three pole switches, terminal markings will be: 1 3 5 1 3 5 / 2 4 6 2 4 6

To obtain terminal markings 1 3 5 7 9 11 / 2 4 6 8 10 12 order six pole switch from pages L5 and L7. Coupling for changeover switch is not available.

❸ Mechanical couplings applied to all LE7 front mount switches must use LFS2- 48x48 or 64x64 type handles. 6-Pole Mechanical Couplings are not designed for use with LFS2- 88x88 or 90x90 type hanldes. Mechanical couplings applied to all LA7 base mount switches may use all types of LFS2 handles where applicable.

# Modular shaft extension system

Shaft Extension Modules are ideal for lengthening the shaft of an LA7 switch up to 144mm (≈5.5"). These rugged polycarbonate modules are 24mm (≈15/16") long and snap on "piggyback" to one another without the use of tools. Strong center shafts interlock as each module is snapped together. The standard 44mm End Shaft supplied with every LA7 switch connects the last Extension Module with the Switch Handle Assembly. End Shafts of 52 and 57mm are also available, making this modular system versatile, fast and economical. Shaft Extension Modules are supplied two per package.

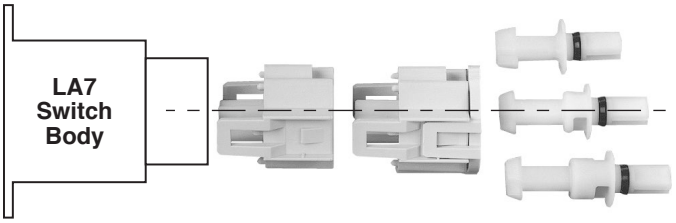


## Modular Shaft Extension Components ❸

| Component | Description | Catalog Number | Price |
|---|---|---|---|
| | **44mm End Shaft** - one 44mm shaft supplied standard with all switches | | |
| | Plastic shaft | **LA2-G2830** | **4.02** |
| | Metal shaft | **L7-G3687 ❷** | **8.02** |
| | **52mm End Shaft** - | | |
| | Plastic shaft | **LA2-G3194** | **4.63** |
| | Metal shaft | **L7-G3707 ❷** | **9.22** |
| | **57mm End Shaft** - | | |
| | Plastic shaft | **LA2-G3195** | **5.26** |
| | **Extension Modules -** Two per package (priced per package) | **LA2-G2853** | **8.37** |

## Determining modular shaft extension components

- Determine Mounting Depth. This is the distance from the inside mounting surface of the enclosure to the ***outside surface*** of the enclosure cover. See diagram below for details. ❶

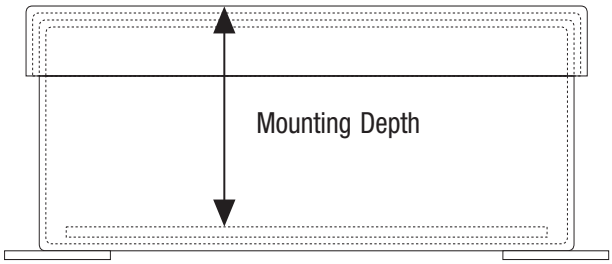


- If necessary convert Mounting Depth inches to millimeters (inches x 25.4 = millimeters).

  ***NOTE:*** Table is based on a standard 3 or 4 pole switch body. For 6 pole switches, *deduct 25mm* from the overall Mounting Depth before referring to table.

- In the Modular Shaft Extension Table to the right, find the Mounting Depth in the column under the appropriate LA7 Switch Body.
- Order the End Shaft and number of Extension Modules required for that Mounting Depth.

## Modular Shaft Extension Table

| Number of Extension Modules | Required End Shaft | Mounting Depth (mm) ❶ | | | |
|---|---|---|---|---|---|
| | | Switch Body LA7-16 | Switch Body LA7-25/32 | Switch Body LA7-40/63 | Switch Body LA7-80/100 |
| 0 | **44mm ❷** | 57.5-63.5 | 66.5-72.5 | 79.5-84.5 | 96-102 |
| 0 | **52mm** | 65-73 | 74-82 | 81.5-94 | 98-111.5 |
| 0 | **57mm** | 70-78 | 79-87 | 86.5-99 | 103-116.5 |
| 1 | **44mm ❷** | 81.5-87.5 | 90.5-96.5 | 103.5-109.5 | 120-126 |
| 1 | **52mm** | 83.5-97 | 92.5-106 | 105.5-119 | 122-135.5 |
| 1 | **57mm** | 88.5-102 | 97.5-111 | 110.5-124 | 127-140.5 |
| 2 | **44mm ❷** | 105.5-111.5 | 114.5-120.5 | 127.5-133.5 | 144-150 |
| 2 | **52mm** | 107.5-121 | 116.5-130 | 129.5-143 | 146-159.5 |
| 2 | **57mm** | 112.5-126 | 121.5-135 | 134.5-148 | 151-164.5 |
| 3 | **44mm ❷** | 129.5-135.5 | 138.5-144.5 | 151.5-157.5 | 168-174 |
| 3 | **52mm** | 131.5-145 | 140.5-154 | 153.5-167 | 170-183.5 |
| 3 | **57mm** | 136.5-150 | 145.5-159 | 158.5-172 | 175-188.5 |
| 4 | **44mm ❷** | 153.5-159.5 | 162.5-168.5 | 175.5-181.5 | 192-198 |
| 4 | **52mm** | 155.5-169 | 164.5-178 | 177.5-191 | 194-207.5 |
| 4 | **57mm** | 160.5-174 | 169.5-183 | 182.5-196 | 199-212.5 |
| 5 | **44mm ❷** | 177.5-183.5 | 186.5-192.5 | 199.5-205.5 | 216-222 |
| 5 | **52mm** | 179.5-193 | 188.5-202 | 201.5-215 | 218-231.5 |
| 5 | **57mm** | 184.5-198 | 193.5-207 | 206.5-220 | 223-236.5 |
| 6 | **44mm ❷** | 201.5-207.5 | 210.5-216.5 | 223.5-229.5 | 240-246 |
| 6 | **52mm** | 203.5-217 | 212.5-226 | 225.5-239 | 242-255.5 |
| 6 | **57mm** | 208.5-222 | 217.5-231 | 230.5-244 | 247-260.5 |

❶ For DIN rail mounted devices, remember to deduct the offset distance provided by the rail. For example, deduct 2.5mm from the Mounting Depth for switch bodies mounted on DIN 46277 rail.
❷ LA7-40…100 3-pole switches and LA7-16…100 6-pole/Changeover switches come standard with a 44mm **metal** End Shaft. LA7-16…32 3-pole switches come standard with a 44mm **plastic** End Shaft.
❸ Order replacement End Shafts for LE (front mount switches) from page L11.

# Metal shaft extension system

Adjustable metal shaft extensions snap on securely to LA7 switches via the same quick-connect design as shaft extension modules. Metal shafts are equipped with a door interlock and a padlock hasp for locking out the switch after the enclosure is opened (for outside lockout, select a Switch Handle Assembly with lockout capability).

Two standard lengths of these unique adjustable shafts are available. Metal shaft extensions mate with any of the standard Switch Handle Assemblies on pages L8 and L9. All necessary hardware is supplied with the shaft.

## Determining metal shaft extension

- Determine Mounting Depth. This is the distance from the inside mounting surface of the enclosure to the ***outside surface*** of the enclosure cover. See diagram below for details. ❶

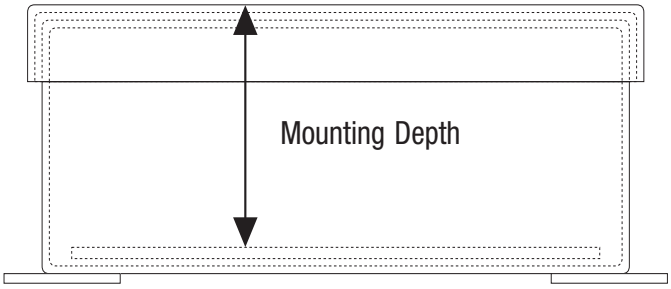


- If necessary convert Mounting Depth inches to millimeters (inches x 25.4 = millimeters).

  ***NOTE:*** Tables are based on a standard 3 or 4 pole switch body. For 6 pole switches, *deduct 25mm* from overall Mounting Depth before referring to table.
- In the Metal Shaft Extension Table to the right, find the Mounting Depth in the column under the appropriate LA7 Switch Body.
- Order the Metal Shaft Extension required for that Mounting Depth.

❶ For DIN rail mounted devices, remember to deduct the offset distance provided by the rail. For example, deduct 2.5mm from the Mounting Depth for switch bodies mounted on DIN 46277 rail.
❷ This dimension can be reduced another 55mm by cutting the plastic sleeve and further cutting the metal shaft.
❸ If using Metal Shaft Extension System with LA7 3 Pole Changeover Switches, insert LA2-G3399 is required for three position switching. Lockout at the switch is not possible. See page L8 for Type E or Type L lockable handles for lockout on outside of enclosure.
❹ Shaft included in package is designed for LA7-S_ and L11-P_ only. Not for use with previous handles.

## Metal Shaft Extension Components (LA7-16…100)

| Component | Catalog Number | Price |
|---|---|---|
| *Length: 110...235mm* *For switching positions:* 0 1 | **LA2-G3393 ❸** | **32.80** |
| *Length: 230...350mm* *For switching positions:* 0 1 | **LA2-G3394 ❸** | **42.70** |
| **Insert** - For modifying metal shaft for use with 3 Pole Changeover Switches (SEE IMPORTANT NOTE ❸) | **LA2-G3399** | **4.55** |

## Metal Shaft Extension Table

| Metal Shaft Extension | Mounting Depth (mm) ❶ | | | |
|---|---|---|---|---|
| | Switch Body LA7-16 | Switch Body LA7-25/32 | Switch Body LA7-40/63 | Switch Body LA7-80/100 |
| **LA2-G3393** | 168❷ - 299 | 173❷ - 304 | 186❷ - 317 | 203❷ - 334 |
| **LA2-G3394** | 288 - 414 | 293 - 419 | 306 - 432 | 323 - 449 |

## R-type Switch Handle Shaft Extensions (LA7-16…100) ❹

*Only select shaft extension from this table if ordering the R-type (UL Type 4X) Switch Handle (page L9). Select shaft after figuring overall Mounting Depth.*

**R-type Switch Handle Shaft Extension *(typical)***

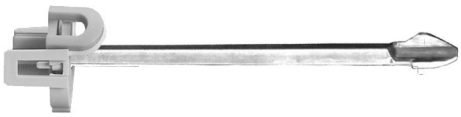

| Mounting Depth (mm) ❶ | | | | Catalog Number | Price |
|---|---|---|---|---|---|
| LA7-16 | LA7-25/32 | LA7-40/63 | LA7-80/100 | | |
| 84.5-108.5 | 93.5-117.5 | 117.5-131.5 | 123.5-147.5 | **LA7-S-67** | **33.27** |
| 107.5-131.5 | 116.5-140.5 | 130.5-154.5 | 146.5-170.5 | **LA7-S-90** | |
| 114.5-138.5 | 123.5-147.5 | 137.5-161.5 | 153.5-177.5 | **LA7-S-97** | |
| 132.5-156.5 | 141.5-165.5 | 155.5 - 179.5 | 171.5-195.5 | **LA7-S-115** | |

**Adjustable R-type Switch Handle Shaft Extension (LA7-S1-P shown)**

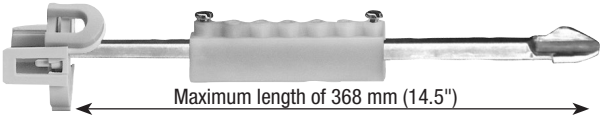


| | | | | | |
|---|---|---|---|---|---|
| 130-385 | 144-399 | 157-412 | 174-429 | **LA7-S1-P** | **40.20** |
| Includes all parts except L11-S1 shaft, order separately | | | | **LA7-NS-P** | **25.20** |

## L7 Enclosed Motor Disconnects (UL and CSA Approved Enclosures) ❶❺

| Amp/Horsepower Rating | | | | | | Painted Steel -UL Type 1/3/12/4 LFS2 Operator - Type 12/IP66 ❼ | | | Nonmetallic - UL Type 1/3/12/4 LFS2 Operator - Type 12/IP66 ❼ | | | Nonmetallic - UL Type 4/4X Operator - UL Type 4/4X | | | Stainless Steel - UL Type 4/4X Operator - UL Type 4/4X | | |
|---|---|---|---|---|---|---|---|---|---|---|---|---|---|---|---|---|---|
| | | | | | | | | | | | | LA7-S handle shown | | | L11-P handle shown | | |
| UL/ CSA Amps | Horsepower 1Ø 120V | Horsepower 1Ø 240V | Horsepower 3Ø 240V | Horsepower 3Ø 480V | Horsepower 3Ø 600V | Catalog Number | Price | Dimension ❻ | Catalog Number | Price | Dimension ❻ | Catalog Number | Price | Dimension ❻ | Catalog Number | Price | Dimension ❻ |
| **3 Pole - ON/OFF** | | | | | | | | | | | | | | | | | |
| 16 | 1 | 2 | 3 | 7.5 | 10 | **LA7-16-1753-WN** | **219** | A | **LA7-16-1753-CN** | **249** | C | **LA7-16-1753-CR** | **258** | C | **LA7-16-1753-SR** | **830** | A |
| 25 | 1 | 2 | 5 | 10 | 10 | **LA7-25-1753-WN** | **246** | A | **LA7-25-1753-CN** | **264** | C | **LA7-25-1753-CR** | **287** | C | **LA7-25-1753-SR** | **883** | A |
| 32 | 1 | 3 | 7.5 | 15 | 15 | **LA7-32-1753-WN** | **264** | A | **LA7-32-1753-CN** | **280** | C | **LA7-32-1753-CR** | **314** | C | **LA7-32-1753-SR** | **914** | A |
| 40 | 2 | 3 | 10 | 20 | 20 | **LA7-40-1753-WN** | **280** | A | **LA7-40-1753-CN** | **306** | C | **LA7-40-1753-CR** | **394** | C | **LA7-40-1753-SR** | **950** | A |
| 63 | 3 | 5 | 15 | 25 | 25 | **LA7-63-1753-WN** | **311** | A | **LA7-63-1753-CN** | **333** | C | **LA7-63-1753-CR** | **425** | C | **LA7-63-1753-SR** | **969** | A |
| 80 | 5 | 10 | 25 | 40 | 50 | **LA7-80-1753-WN** | **345** | B | **LA7-80-1753-CN** | **482** | D | **LA7-80-1753-CR** | **466** | D | **LA7-80-1753-SR** | **1003** | B |
| 100 | 7.5 | 15 | 30 | 50 | 50 | **LA7-100-1753-WN** | **392** | B | **LA7-100-1753-CN** | **526** | D | **LA7-100-1753-CR** | **504** | D | **LA7-100-1753-SR** | **1053** | B |
| **4 Pole - ON/OFF ❹** | | | | | | | | | | | | | | | | | |
| 16 | 1 | 2 | 3 | 7.5 | 10 | **LA7-16-1754-WN** | **240** | A | **LA7-16-1754-CN** | **272** | C | **LA7-16-1754-CR** | **325** | C | **LA7-16-1754-SR** | **868** | A |
| 25 | 1 | 2 | 5 | 10 | 10 | **LA7-25-1754-WN** | **264** | A | **LA7-25-1754-CN** | **294** | C | **LA7-25-1754-CR** | **347** | C | **LA7-25-1754-SR** | **889** | A |
| 32 | 1 | 3 | 7.5 | 15 | 15 | **LA7-32-1754-WN** | **282** | A | **LA7-32-1754-CN** | **315** | C | **LA7-32-1754-CR** | **367** | C | **LA7-32-1754-SR** | **910** | A |
| 40 | 2 | 3 | 10 | 20 | 20 | **LA7-40-1754-WN** | **323** | A | **LA7-40-1754-CN** | **347** | C | **LA7-40-1754-CR** | **401** | C | **LA7-40-1754-SR** | **942** | A |
| 63 | 3 | 5 | 15 | 25 | 25 | **LA7-63-1754-WN** | **350** | A | **LA7-63-1754-CN** | **381** | C | **LA7-63-1754-CR** | **436** | C | **LA7-63-1754-SR** | **978** | A |
| 80 | 5 | 10 | 25 | 40 | 50 | **LA7-80-1754-WN** | **393** | B | **LA7-80-1754-CN** | **535** | D | **LA7-80-1754-CR** | **621** | D | **LA7-80-1754-SR** | **1392** | B |
| 100 | 7.5 | 15 | 30 | 50 | 50 | **LA7-100-1754-WN** | **453** | B | **LA7-100-1754-CN** | **595** | D | **LA7-100-1754-CR** | **658** | D | **LA7-100-1754-SR** | **1453** | B |
| **6 Pole - ON/OFF** | | | | | | | | | | | | | | | | | |
| 16 | 1 | 2 | 3 | 7.5 | 10 | **LA7-16-1756-WN** | **271** | B | **LA7-16-1756-CN** | **423** | D | **LA7-16-1756-CR** | **442** | D | **LA7-16-1756-SR** | **1335** | B |
| 25 | 1 | 2 | 5 | 10 | 10 | **LA7-25-1756-WN** | **306** | B | **LA7-25-1756-CN** | **453** | D | **LA7-25-1756-CR** | **601** | D | **LA7-25-1756-SR** | **1374** | B |
| 32 | 1 | 3 | 7.5 | 15 | 15 | **LA7-32-1756-WN** | **340** | B | **LA7-32-1756-CN** | **484** | D | **LA7-32-1756-CR** | **756** | D | **LA7-32-1756-SR** | **1420** | B |
| 40 | 2 | 3 | 10 | 20 | 20 | **LA7-40-1756-WN** | **397** | B | **LA7-40-1756-CN** | **539** | D | **LA7-40-1756-CR** | **592** | D | **LA7-40-1756-SR** | **1464** | B |
| 63 | 3 | 5 | 15 | 25 | 25 | **LA7-63-1756-WN** | **445** | B | **LA7-63-1756-CN** | **587** | D | **LA7-63-1756-CR** | **959** | D | **LA7-63-1756-SR** | **1526** | B |

## Modifications (Factory Assembled) ❷

| Description | Catalog Number Suffix | Adder |
|---|---|---|
| **Ground Terminal** | | |
| For LA7-16 | **-PE** | **22.20** |
| For LA7-25 & 32 | **-PE** | **22.50** |
| For LA7-40 & 63 | **-PE** | **29.90** |
| For LA7-80 & 100 | **-PE** | **45.20** |
| **Neutral Terminal** | | |
| For LA7-16 | **-TN ❸** | **22.20** |
| For LA7-25 & 32 | **-TN ❸** | **22.50** |
| For LA7-40 & 63 | **-TN ❸** | **29.90** |
| For LA7-80 & 100 | **-TN ❸** | **45.20** |

***NOTE:*** All -WN and -CN Enclosed Disconnects come standard with a round, yellow and red, screw fixing handle (Type N) with ON/OFF marking. For a round gray and black handle, change "N" to "G". Example: change LA7-25-1753-W**N** to LA7-25-1753-W**G**. For a gray and black square handle (LFS2-A), change "N" to "A". For example, change LA7-25-1753-W**N** to LA7-25-1753-W**A**.

All -CR and -SR Enclosed Disconnects come standard with a round yellow and red handle set to defeatable door interlocking mode (Type R) and ON/OFF marking. For a black handle change "R" to "B". For example, change LA7-25-1753-C**R** to LA7-25-1753-C**B**. *Note: L11-S*/P* Handles can be field converted to non-defeatable mode by inserting a plastic tab which ships in a packet with the enclosed assemblies. See pages L8…L9 for descriptions of all Switch Handle Assemblies.*

❶ UL/CSA Approved enclosures do not provide for knockouts. Wire opening must be drilled by user.
❷ Up to two modifications available per Enclosed Disconnect (one modification possible on 4 pole switches).
❸ Not available on four pole switches.
❹ One additional factory modification possible.
❺ Non-metallic enclosures are fiberglass reinforced polyester type.
❻ LA7-…-CR and -SR Enclosures with dim codes A and C include LA7-S_ Handles, and dim codes B and D include L11-P_ handles. Transition to LA7-S* handles will be a gradual change.
❼ To substitute L11 4X handle add -PY for yellow/red or -PB for black handle; For example: LA7-25-1753-**WN** changes to LA7-25-1753-**WN-PY**. Add $32 to list price.

## L7 Enclosed Motor Disconnects (UL and CSA Approved Enclosures) ❶

| Amp/Horsepower Rating | | | | | | Painted Steel -UL Type 1/3/12/4 LFS2 Operator - Type 12/IP66 ❹ | | | Nonmetallic - UL Type 1/3/12/4 LFS2 Operator - Type 12/IP66 ❹ | | | Nonmetallic - UL Type 4/4X Operator - UL Type 4/4X | | | Stainless Steel - UL Type 4/4X Operator - UL Type 4/4X | | |
|---|---|---|---|---|---|---|---|---|---|---|---|---|---|---|---|---|---|
| | | | | | | | | | | | | LA7-S handle shown | | | L11-P handle shown | | |
| UL/CSA Amps | Horsepower 1Ø 120V | Horsepower 1Ø 240V | Horsepower 3Ø 240V | Horsepower 3Ø 480V | Horsepower 3Ø 600V | Catalog Number | Price | Dimension ❺ | Catalog Number | Price | Dimension ❺ | Catalog Number | Price | Dimension ❺ | Catalog Number | Price | Dimension ❺ |
| **3 Pole - ON/OFF** *(with 1 NOEM and 1 NCLB - Make Before Break)* | | | | | | | | | | | | | | | | | |
| 16 | 1 | 2 | 3 | 7.5 | 10 | LA7-16-1753-WN-PL11 | 259 | A | LA7-16-1753-CN-PL11 | 290 | C | LA7-16-1753-CR-PL11 | 305 | C | LA7-16-1753-SR-PL11 | 877 | A |
| 25 | 1 | 2 | 5 | 10 | 10 | LA7-25-1753-WN-PL11 | 274 | A | LA7-25-1753-CN-PL11 | 306 | C | LA7-25-1753-CR-PL11 | 337 | C | LA7-25-1753-SR-PL11 | 900 | A |
| 32 | 1 | 3 | 7.5 | 15 | 15 | LA7-32-1753-WN-PL11 | 290 | A | LA7-32-1753-CN-PL11 | 321 | C | LA7-32-1753-CR-PL11 | 365 | C | LA7-32-1753-SR-PL11 | 965 | A |
| 40 | 2 | 3 | 10 | 20 | 20 | LA7-40-1753-WN-PL11 | 319 | A | LA7-40-1753-CN-PL11 | 352 | C | LA7-40-1753-CR-PL11 | 404 | C | LA7-40-1753-SR-PL11 | 947 | A |
| 63 | 3 | 5 | 15 | 25 | 25 | LA7-63-1753-WN-PL11 | 347 | A | LA7-63-1753-CN-PL11 | 379 | C | LA7-63-1753-CR-PL11 | 476 | C | LA7-63-1753-SR-PL11 | 1020 | A |
| 80 | 5 | 10 | 25 | 40 | 50 | LA7-80-1753-WN-PL11 | 391 | B | LA7-80-1753-CN-PL11 | 533 | D | LA7-80-1753-CR-PL11 | 517 | D | LA7-80-1753-SR-PL11 | 1389 | B |
| 100 | 7.5 | 15 | 30 | 50 | 50 | LA7-100-1753-WN-PL11 | 433 | B | LA7-100-1753-CN-PL11 | 575 | D | LA7-100-1753-CR-PL11 | 636 | D | LA7-100-1753-SR-PL11 | 1104 | B |
| **4 Pole - ON/OFF** *(with 1 NOEM and 1 NCLB - Make Before Break)* ❸ | | | | | | | | | | | | | | | | | |
| 16 | 1 | 2 | 3 | 7.5 | 10 | LA7-16-1754-WN-PL11 | 280 | A | LA7-16-1754-CN-PL11 | 232 | C | LA7-16-1754-CR-PL11 | 284 | C | LA7-16-1754-SR-PL11 | 827 | A |
| 25 | 1 | 2 | 5 | 10 | 10 | LA7-25-1754-WN-PL11 | 301 | A | LA7-25-1754-CN-PL11 | 294 | C | LA7-25-1754-CR-PL11 | 347 | C | LA7-25-1754-SR-PL11 | 889 | A |
| 32 | 1 | 3 | 7.5 | 15 | 15 | LA7-32-1754-WN-PL11 | 323 | A | LA7-32-1754-CN-PL11 | 356 | C | LA7-32-1754-CR-PL11 | 409 | C | LA7-32-1754-SR-PL11 | 951 | A |
| 40 | 2 | 3 | 10 | 20 | 20 | LA7-40-1754-WN-PL11 | 370 | A | LA7-40-1754-CN-PL11 | 393 | C | LA7-40-1754-CR-PL11 | 445 | C | LA7-40-1754-SR-PL11 | 988 | A |
| 63 | 3 | 5 | 15 | 25 | 25 | LA7-63-1754-WN-PL11 | 397 | A | LA7-63-1754-CN-PL11 | 428 | C | LA7-63-1754-CR-PL11 | 480 | C | LA7-63-1754-SR-PL11 | 1023 | A |
| 80 | 5 | 10 | 25 | 40 | 50 | LA7-80-1754-WN-PL11 | 443 | B | LA7-80-1754-CN-PL11 | 585 | D | LA7-80-1754-CR-PL11 | 646 | D | LA7-80-1754-SR-PL11 | 1441 | B |
| 100 | 7.5 | 15 | 30 | 50 | 50 | LA7-100-1754-WN-PL11 | 504 | B | LA7-100-1754-CN-PL11 | 646 | D | LA7-100-1754-CR-PL11 | 706 | D | LA7-100-1754-SR-PL11 | 1502 | B |
| **6 Pole - ON/OFF** *(with 1 NOEM and 1 NCLB - Make Before Break)* | | | | | | | | | | | | | | | | | |
| 16 | 1 | 2 | 3 | 7.5 | 10 | LA7-16-1756-WN-PL11 | 319 | B | LA7-16-1756-CN-PL11 | 461 | D | LA7-16-1756-CR-PL11 | 516 | D | LA7-16-1756-SR-PL11 | 1311 | B |
| 25 | 1 | 2 | 5 | 10 | 10 | LA7-25-1756-WN-PL11 | 350 | B | LA7-25-1756-CN-PL11 | 492 | D | LA7-25-1756-CR-PL11 | 546 | D | LA7-25-1756-SR-PL11 | 1343 | B |
| 32 | 1 | 3 | 7.5 | 15 | 15 | LA7-32-1756-WN-PL11 | 381 | B | LA7-32-1756-CN-PL11 | 523 | D | LA7-32-1756-CR-PL11 | 578 | D | LA7-32-1756-SR-PL11 | 1373 | B |
| 40 | 2 | 3 | 10 | 20 | 20 | LA7-40-1756-WN-PL11 | 443 | B | LA7-40-1756-CN-PL11 | 585 | D | LA7-40-1756-CR-PL11 | 638 | D | LA7-40-1756-SR-PL11 | 1434 | B |
| 63 | 3 | 5 | 15 | 25 | 25 | LA7-63-1756-WN-PL11 | 490 | B | LA7-63-1756-CN-PL11 | 632 | D | LA7-63-1756-CR-PL11 | 687 | D | LA7-63-1756-SR-PL11 | 1482 | B |

## Modifications (Factory Assembled) ❷

| Description | Catalog Number Suffix | Adder |
|---|---|---|
| **Ground Terminal** | | |
| For LA7-16 | -PE | 22.20 |
| For LA7-25 & 32 | -PE | 22.50 |
| For LA7-40 & 63 | -PE | 29.90 |
| For LA7-80 & 100 | -PE | 45.20 |
| **Neutral Terminal** | | |
| For LA7-16 | -TN | 22.20 |
| For LA7-25 & 32 | -TN | 22.50 |
| For LA7-40 & 63 | -TN | 29.90 |
| For LA7-80 & 100 | -TN | 45.20 |

***NOTE:*** All -WN and -CN Enclosed Disconnects come standard with a round, yellow and red, screw fixing handle (Type N) with ON/OFF marking. For a round gray and black handle, change "N" to "G". Example: change LA7-25-1753-W**N** to LA7-25-1753-W**G**. For a gray and black square handle (Type A), change "N" to "A". Example: change LA7-25-1753-W**N** to LA7-25-1753-W**A**.

All -CR and -SR Enclosed Disconnects come standard with a round yellow and red handle set to defeatable door interlocking mode (Type R) and ON/OFF marking.For a black handle change "R" to "B". For example, change LA7-25-1754-C**R**-PL11 to LA7-25-1754-C**B**-PL11. *Note: L11-S*/P* Handles can be field converted to non-defeatable mode by inserting a plastic tab which ships in a packet with the enclosed assemblies. See pages L8…L9 for descriptions of all Switch Handle Assemblies.*

❶ UL/CSA Approved enclosures do not provide for knockouts. Wire opening must be drilled by user.
❷ One modification available per Enclosed Disconnect (no modifications available on 4 pole).
❸ Factory modifications not available.
❹ Nonmetallic enclosures are fiberglass reinforced polyester type.
❺ LA7-…-CR and -SR Enclosures with dim codes A & C include LA7-S_ Handles, and dim codes B & D include L11-P_ handles. Transition to LA7-S* handles will be a gradual change.
❻ To substitute L11 4X handle add -PY for yellow/red or -PB for black handle. For example: LA7-25-1753-**WN**-PL11 changes to LA7-25-1753-**WN-PY**-PL11. Add $32 to list price.

## LY7 Enclosed Load Disconnect Switches (IP Rated Enclosures) ❶

| Amp/Horsepower Rating | | | | | | Plastic - IP66 ABS Enclosure Operator - IP66, Red/Yellow (Type N) | | Plastic - IP66 ABS Enclosure Operator - IP66, Gray/Black (Type G) | | Plastic - IP66 ABS Enclosure Operator - IP66, Silver/Black (Type A) | |
|---|---|---|---|---|---|---|---|---|---|---|---|
| UL/ CSA Amps | Horsepower | | | | | | | | | | |
| | 1Ø | | 3Ø | | | | | | | | |
| | 120V | 240V | 240V | 480V | 600V | Catalog Number | Price | Catalog Number | Price | Catalog Number | Price |
| **3 Pole - ON/OFF** | | | | | | | | | | | |
| 16 | 1 | 2 | 3 | 7.5 | 10 | **LY7-16M-1753-N4** | **99.64** | **LY7-16M-1753-G4** | **99.64** | **LY7-16M-1753-A4** | **98.61** |
| 25 | 1 | 2 | 5 | 10 | 10 | **LY7-25-1753-N6** | **158.19** | **LY7-25-1753-G6** | **158.19** | **LY7-25-1753-A6** | **145.86** |
| 32 | 1 | 3 | 7.5 | 15 | 15 | **LY7-32-1753-N6** | **163.33** | **LY7-32-1753-G6** | **163.33** | **LY7-32-1753-A6** | **149.97** |
| 40 | 2 | 3 | 10 | 20 | 20 | **LY7-40-1753-N6** | **207.49** | **LY7-40-1753-G6** | **207.49** | **LY7-40-1753-A6** | **197.22** |
| 63 | 3 | 5 | 15 | 25 | 25 | **LY7-63-1753-N6** | **219.82** | **LY7-63-1753-G6** | **219.82** | **LY7-63-1753-A6** | **207.49** |
| 80 | 5 | 10 | 25 | 40 | 50 | **LY7-80-1753-N6** | **306.10** | **LY7-80-1753-G6** | **306.10** | **LY7-80-1753-A6** | **292.75** |
| 100 | 7.5 | 15 | 30 | 50 | 50 | **LY7-100-1753-N6** | **345.13** | **LY7-100-1753-G6** | **345.13** | **LY7-100-1753-A6** | **332.81** |
| **6 Pole - ON/OFF** | | | | | | | | | | | |
| 16 | 1 | 2 | 3 | 7.5 | 10 | **LY7-16M-1756-N6** | **200.31** | **LY7-16M-1756-G6** | **200.31** | **LY7-16M-1756-A6** | **197.22** |
| 25 | 1 | 2 | 5 | 10 | 10 | **LY7-25-1756-N6** | **316.37** | **LY7-25-1756-G6** | **316.37** | **LY7-25-1756-A6** | **291.72** |
| 32 | 1 | 3 | 7.5 | 15 | 15 | **LY7-32-1756-N6** | **325.62** | **LY7-32-1756-G6** | **325.62** | **LY7-32-1756-A6** | **303.02** |
| 40 | 2 | 3 | 10 | 20 | 20 | **LY7-40-1756-N6** | **417.04** | **LY7-40-1756-G6** | **417.04** | **LY7-40-1756-A6** | **404.00** |
| 63 | 3 | 5 | 15 | 25 | 25 | **LY7-63-1756-N6** | **440.67** | **LY7-63-1756-G6** | **440.67** | **LY7-63-1756-A6** | **414.98** |

## Assembled L7 Disconnect Switches

| Switch | Description | Function | Color | Circuit | Poles | UL/CSA Amps | Catalog Number | Price |
|---|---|---|---|---|---|---|---|---|
| | **Type Q Load Switch** - This pre-assembled switch is designed for panels with standard 45mm cutouts. The specially designed switch handle also makes it ideal for mounting *within* a distribution panel when ready access to the operator is not desired. Finger-proof to IP20. | 0 ON-OFF 90° Switching | Gray face/ Black Handle | 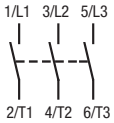  | 3 | 25 | **LA7-25-1753-Q** | **108.88** |
| | | | | | | 32 | **LA7-32-1753-Q** | **118.13** |
| | **Emergency Off Switch** - This yellow and red pre-assembled switch is designed as an Emergency Off for panels with standard 45mm cutouts. The specially designed switch handle also makes it ideal for mounting *within* a distribution panel when a color coded OFF switch is desired. Finger-proof to IP20 with provision for locking with one padlock. | 0 ON-OFF 90° Switching | Yellow face/ Red handle | 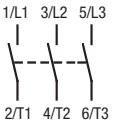  | 3 | 25 | **LA7-25-1753-R** | **108.88** |
| | | | | | | 32 | **LA7-32-1753-R** | **118.13** |

❶ Suitable for use in NEMA 4 type applications (not UL listed).

## Thermoplastic Enclosures (IP Rated)

| Accessory | Description | Enclosure Size | For use with... | Poles | Shaft Required... | Catalog Number | Price |
|---|---|---|---|---|---|---|---|
| | **ABS Enclosure – For High Impact Applications**<br>IP66, UL94 Flame Resistance - HB<br>Includes 1 Grounding/Neutral terminal. | | | | | | |
| | | 95 (W) x 150 (H) x 86 (D) | LA7-25…32 | 3 / 4 | LA2-G3194 | **LA2-G3572** | **70.10** |
| | | 95 (W) x 150 (H) x 111 (D) | | | | **LA2-G3573** | **77.00** |
| | With pre-drilled holes for 64 x 64 operator or larger | 125 (W) x 180 (H) x 105 (D) | LA7-25…32 | 6 | With switch Supplied with enclosure | **L7-G3663** | **94.70** |
| | | | LA7-40…63 | 3 / 4 | | | |
| | | 175 (W) x 230 (H) x 120 (D) | LA7-40…63 | 6 | With switch Supplied with enclosure | **L7-G3665** | **128.00** |
| | | | LA7-80…100 | 3 / 4 | | | |
| | Without holes | 95 (W) x 150 (H) x 86 (D)<br>95 (W) x 150 (H) x 111 (D) | | | | **LA2-G3574**<br>**LA2-G3575** | **69.20**<br>**76.20** |
| | **Noryl Enclosure – For Corrosion Prone Applications**<br>IP66, UL94 Flame Resistance - V0<br>Includes 1 Grounding/Neutral terminal. | | | | | | |
| | | 95 (W) x 150 (H) x 86 (D) | LA7-25…32 | 3 / 4 | LA2-G3194 | **LA2-G3576** | **98.20** |
| | | 95 (W) x 150 (H) x 111 (D) | | | | **LA2-G3577** | **108.00** |
| | With pre-drilled holes for 64 x 64 operator or larger | 125 (W) x 180 (H) x 105 (D) | LA7-25…32 | 6 | With switch Supplied with enclosure | **L7-G3664** | **134.00** |
| | | | LA7-40…63 | 3 / 4 | | | |
| | | 175 (W) x 230 (H) x 120 (D) | LA7-40…63 | 6 | With switch Supplied with enclosure | **L7-G3666** | **180.00** |
| | | | LA7-80…100 | 3 / 4 | | | |
| | Without holes | 95 (W) x 150 (H) x 86 (D)<br>95 (W) x 150 (H) x 111 (D) | | | | **LA2-G3578**<br>**LA2-G3579** | **96.90**<br>**108.00** |

## Enclosure Accessories

| Accessory | Description | For use with... | Pkg Qty | Catalog Number | Price Each |
|---|---|---|---|---|---|
| <br>L7-G3653<br> <br>L7-G3673 | **Additional Ground & Neutral Terminals -**<br>• Provision for two<br>• One included with enclosures above<br>• **Sold only in quantities of 5. Order 5 pieces to receive one package of 5.** | LA2-G357...<br>L7-G366... | **5** | **L7-G3653**<br>**L7-G3673** | **5.00**<br>**14.50** |

## Technical Information

### Performance Data

| | | | | 16A | 25A | 32A | 40A | 63A | 80A | 100A | Aux. Cont. |
|---|---|---|---|---|---|---|---|---|---|---|---|
| **Rated operational voltage $U_e$** | | UL/CSA | [V] | 600 | 600 | 600 | 600 | 600 | 600 | 600 | 600 |
| | | IEC ❶ | [V] | 690 | 690 | 690 | 690 | 690 | 690 | 690 | 690 |
| **Rated insulation voltage $U_i$** | | UL/CSA | [V] | 600 | 600 | 600 | 600 | 600 | 600 | 600 | 600 |
| | | IEC | [V] | 690 | 690 | 690 | 690 | 690 | 690 | 690 | 690 |
| **Rated impulse voltage $U_{imp}$** | | UL/CSA | [kV] | 8 | 8 | 8 | 8 | 8 | 8 | 8 | 8 |
| **Test voltage $U_i$** | | 1 minute | [kV] | 2.5 | 2.5 | 2.5 | 2.5 | 2.5 | 2.5 | 2.5 | 2.5 |
| **Lost power, per pole** | | | [W] | 0.58 | 1.0 | 1.5 | 1.6 | 2.4 | 3.6 | 5.5 | 0.4 |
| **Rated Frequency** | | | [Hz] | 50/60 | 50/60 | 50/60 | 50/60 | 50/60 | 50/60 | 50/60 | 50/60 |
| **Conventional free air thermal current $I_{th}$ ❶** | | | [A] | 25 | 40 | 50 | 63 | 75 | 100 | 120 | 12 |
| **Conventional enclosed thermal current $I_{th}$ ❶** | | | [A] | 20 | 32 | 40 | 50 | 63 | 80 | 100 | 10 |
| **Rated Current $I_e$ ❶** | | | | | | | | | | | |
| **AC-1** | Non-inductive or only slightly inductive loads | 690V | [A] | 16 | 25 | 32 | 40 | 63 | 80 | 100 | 10 |
| **AC-21A** | Switching of resistive loads with slight overload | | | | | | | | | | |
| **Rated Power $P_e$** | | | | | | | | | | | |
| **AC-23A** | Occasional switching of 3Ø motors and other highly inductive loads (criterion for selecting main switches) | 230V | [kW] | 5.5 | 7.5 | 7.5 | 15 | 18.5 | 22 | 30 | – |
| | | 400V | [kW] | 7.5 | 11 | 15 | 22 | 30 | 37 | 55 | – |
| | | 690V | [kW] | 7.5 | 11 | 15 | 18.5 | 22 | 37 | 45 | – |
| **AC-3** | Squirrel cage motors; starting and stopping of running motors | 230V | [kW] | 4 | 5.5 | 7.5 | 11 | 15 | 18.5 | 22 | – |
| | | 400V | [kW] | 5.5 | 7.5 | 11 | 15 | 18.5 | 30 | 37 | – |
| | | 690V | [kW] | 5.5 | 7.5 | 11 | 15 | 18.5 | 30 | 22 | – |
| **Short circuit current (Type 2 coordination)** | | | | | | | | | | | |
| Rated conditional short circuit current | | 400/415V | [kA] | 20 | 20 | 15 | 20 | 15 | 30 | 25 | – |
| Maximum fuse rating of circuit (type g, G) | | | [A] | 20 | 25 | 35 | 50 | 63 | 80 | 100 | – |
| Rated short-time current 1cw, 1s | | | [A] | 800 | 900 | 900 | 1300 | 1300 | 2500 | 2500 | – |
| **Rated breaking capacity AC23A (cosφ 0.45)** | | 230V | [A] | 156 | 296 | 296 | 484 | 484 | 780 | 780 | – |
| | | 400V | [A] | 120 | 256 | 256 | 504 | 504 | 800 | 800 | – |
| | | 690V | [A] | 70 | 136 | 136 | 196 | 196 | 376 | 376 | – |
| **DC switching capacity** | | | | | | | | | | | |
| **Rated current $I_e$** | 1 pole | 24/48V | [A] | 20 | 25 | 32 | 40 | 63 | 80 | 100 | – |
| | | 110V | [A] | 5 | 5 | 6 | 8 | 10 | 16 | 20 | – |
| | | 220V | [A] | 1 | 1 | 1 | 1.5 | 1.5 | 3 | 3 | – |
| | | 440V | [A] | 0.5 | 0.5 | 0.5 | 0.6 | 0.6 | 0.7 | 0.7 | – |
| **DC-21A** For resistive loads, T< 1 ms $U_e$ max = 660V | 2 poles in series | 96V | [A] | 20 | 25 | 32 | 40 | 63 | 80 | 100 | – |
| | | 110V | [A] | 20 | 23 | 25 | 32 | 50 | 70 | 80 | – |
| | | 220V | [A] | 5 | 5 | 6 | 8 | 10 | 16 | 20 | – |
| | | 440V | [A] | 1 | 1 | 1 | 1.5 | 1.5 | 3 | 3 | – |
| | | 600V | [A] | 0.6 | 0.6 | 0.6 | 0.8 | 0.8 | 1 | 1 | – |
| | 3 poles in series | 110V | [A] | 20 | 25 | 32 | 40 | 63 | 80 | 100 | – |
| | | 220V | [A] | 13 | 13 | 15 | 20 | 28 | 50 | 63 | – |
| | | 440V | [A] | 2.2 | 2.2 | 2.2 | 3.6 | 3.6 | 6.5 | 6.5 | – |
| | | 600V | [A] | 1.3 | 1.5 | 1.5 | 2 | 2 | 3 | 3 | – |
| **Rated power $P_e$** | | 90V | [kW] | 1 | 1.3 | 1.5 | 2.9 | 4.1 | 5.1 | 7.2 | – |
| **DC-23A, DC-3, DC-5** | 3 poles in series | 110V | [kW] | 1 | 1.1 | 1.3 | 2.2 | 3.3 | 5.5 | 7 | – |
| For inductive loads, T< 15 ms | | 220V | [kW] | 0.8 | 0.9 | 1.1 | 1.7 | 2 | 3.5 | 4.4 | – |
| | | 440V | [kW] | 0.6 | 0.6 | 0.6 | 0.9 | 0.9 | 1.1 | 1.1 | – |
| | | 600V | [kW] | 0.4 | 0.4 | 0.4 | 0.5 | 0.5 | 0.9 | 0.9 | – |

❶ See Conformity to Standards on next page.

## Technical Information *(continued)*

| | | | 16A | 25A | 32A | 40A | 63A | 80A | 100A | Aux. Cont. |
|---|---|---|---|---|---|---|---|---|---|---|
| **UL/CSA Data** | | | | | | | | | | |
| **Continuous current** | | [A] | 16 | 25 | 32 | 40 | 63 | 80 | 100 | – |
| **Heavy Pilot Duty** | | [AC] | A600 | A600 | A600 | – | – | – | – | A600 |
| **Standard Duty** | | [DC] | – | – | – | – | – | – | – | Q600 |
| **Motor Rating 60Hz** | 120V | [FLA] | 16 | 16 | 16 | 24 | 34 | 56 | 80 | – |
| | | [HP] | 1 | 1 | 1 | 2 | 3 | 5 | 7.5 | – |
| | 240V | [FLA] | 12 | 12 | 17 | 17 | 28 | 50 | 68 | – |
| Single phase, 2 poles | | [HP] | 2 | 2 | 3 | 3 | 5 | 10 | 15 | – |
| | 480V | [FLA] | 8.5 | 8.5 | 14 | 21 | 26 | 34 | 68 | – |
| | | [HP] | 3 | 3 | 5 | 7.5 | 10 | 15 | 30 | – |
| | 600V | [FLA] | 11.2 | 11.2 | 11.2 | 16 | 20 | 27 | 44 | – |
| | | [HP] | 5 | 5 | 5 | 7.5 | 10 | 15 | 25 | – |
| | 120V | [FLA] | 13.6 | 13.6 | 19.2 | 30.4 | 40 | 56 | 84 | – |
| | | [HP] | 2 | 2 | 3 | 5 | 7.5 | 10 | 15 | – |
| | 240V | [FLA] | 9.6 | 15.2 | 22 | 28 | 42 | 68 | 80 | – |
| Three phase | | [HP] | 3 | 5 | 7.5 | 10 | 15 | 25 | 30 | – |
| | 480V | [FLA] | 11 | 14 | 21 | 27 | 34 | 52 | 65 | – |
| | | [HP] | 7.5 | 10 | 15 | 20 | 25 | 40 | 50 | – |
| | 600V | [FLA] | 11 | 11 | 17 | 22 | 27 | 52 | 52 | – |
| | | [HP] | 10 | 10 | 15 | 20 | 25 | 50 | 50 | – |
| **Short Circuit Ratings** Maximum short circuit prospective fault current, RMS symmetrical, 600 VAC max. | | | | | | | | | | |
| When protected by Class K5 fuses, maximum amperes of rated fuse | | [KA] | 5 | 5 | 5 | 5 | 5 | 5 | 5 | – |
| | | [A] | 25 | 35 | 35 | 80 | 80 | 125 | 125 | – |
| When protected by J Class fuses, maximum amperes of rated fuse | | [KA] | ~ | 65 | 65 | 65 | 65 | 65 | 65 | – |
| | | [A] | ~ | 30 | 30 | 60 | 60 | 100 | 100 | – |

## Mechanical Data

| | | | 16A | 25A…32A | 40A…63A | 80A…100A | Aux. Cont. |
|---|---|---|---|---|---|---|---|
| **Protection class according to IEC 529** | | | | | | | |
| Motor rating 60 Hz | | | | | | | |
| Actuators | | | | | Type 12 / IP66 | | |
| Switch bodies | | | | | IP20 | | |
| **Mechanical life** | [millions of operations] | | | | 0.2 | | |
| **Maximum wire gauges** | | | | | | | |
| Terminal size per IEC 947-1 | | | A4 | A6 | A7 | A9 | 2xA2 |
| Fine strands | 1/2 conductor | [AWG] | (1)16…10/(2)16…12 | (1)14…8/(2)14…10 | (1)12…4/(2)12…8 | (1)10…1/(2)10…4 | 18…14 |
| | | [mm²] | (1)1…10/(2)1…4 | (1)1.5…16/(2)1.5…6 | (1)2.5…25/(2)2.5…16 | (1)4…50/(2)4…25 | 0.75…2.5 |
| Rigid wire | 1/2 conductor | [AWG] | (1)16…8/(2)16…12 | (1)14…8/(2)14…10 | (1)12…4/(2)12…8 | (1)10…1/(2)10…6 | 18…14 |
| | | [mm²] | (1)1.5…6/(2)1.5…4 | (1)1.5…10/(2)1…6 | (1)2.5…16/(2)2.5…10 | (1)4…35/(2)4…16 | 0.5…2.5 |
| **Tightening Torque** | max. | [lb-in] | 12 | 12 | 25 | 50 | 8 |
| | | [Nm] | 1.4 | 1.4 | 2.8 | 5.6 | 1.0 |
| **Ambient Temperature** | Operation | [°C] | | | -25…+60 °C (-13…+140 °F) | | |
| | Storage | [°C] | | | -40…+80 °C (-40…+176 °F) | | |

### Conformity to Standards: ❶

IEC 947-1, IEC 947-3 Low voltage switchgear and control gear part 3: Switches, disconnectors, switch-disconnectors and fuse-combination units.
CE
UL 508: Industrial Control Equipment
CSA: C22.2 No. 14: Industrial Control Equipment

### Approvals: ❶

UL Listed (File No. E54612 NLRV)
CSA Certified (LR 13002)
CCC Certified
Meets IEC, VDE and BS standard requirements
IEC/CE Marked (Per EN60947-3)

❶ LA(E)-16 switches are cUL approved.

## LE7 Front Mount (3 Pole) with Screw Fixing Handle

Dimensions are in millimeters (inches). Dimensions not intended for manufacturing purposes.

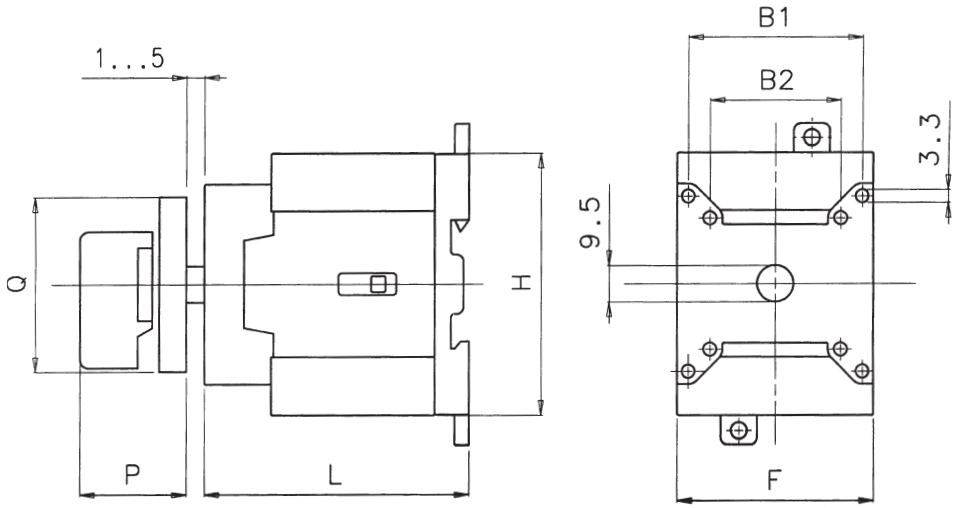


| Switch Handle | | |
|---|---|---|
| **Type** | **P** | **Q** |
| LFS2-A-4 | 28 | 48 x 48 |
| LFS2-E-4 | 28 | 48 x 48 |
| LFS2-I-4 | 28 | 48 x 48 |
| LFS2-L-4 | 28 | 48 x 48 |
| LFS2-S-4 | 28 | 48 x 62 |
| LFS2-A-6 | 28 | 64 x 64 |
| LFS2-E-6 | 28 | 64 x 64 |
| LFS2-I-6 | 28 | 64 x 64 |
| LFS2-L-6 | 28 | 64 x 64 |
| LFS2-S-6 | 28 | 64 x 78 |
| LFS7-G-4 | 34 | 54 x 54 |
| LFS7-N-4 | 34 | 54 x 54 |
| LFS2-G-6 | 34 | 67 x 67 |
| LFS2-N-6 | 34 | 67 x 67 |
| LFS2-A-8 | 45 | 88 x 88 |
| LFS2-I-8 | 45 | 88 x 88 |
| LFS2-G-8 | 49 | 88 x 88 |
| LFS2-N-8 | 49 | 88 x 88 |

| Switch Body | | | | | |
|---|---|---|---|---|---|
| **Type** | **B1** | **B2** | **F** | **H** | **L** |
| LE7-16 | – | 28 | 36 | 63 | 51 |
| LE7-25/32 | – | 36 | 45 | 63 | 60 |
| LE7-40/63 | 48 | 36 | 54 | 72 | 74 |
| LE7-80/100 | 48 | 36 | 72 | 90 | 90 |

## LE7 Front Mount (6 Pole) with Screw Fixing Handle

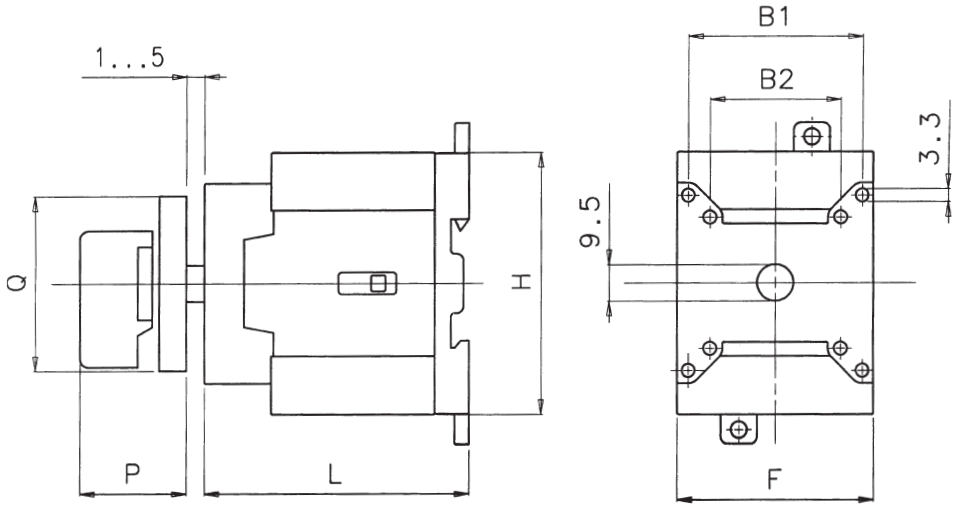


| Switch Handle | | |
|---|---|---|
| **Type** | **P** | **Q** |
| LFS2-A-4 | 28 | 48 x 48 |
| LFS2-E-4 | 28 | 48 x 48 |
| LFS2-I-4 | 28 | 48 x 48 |
| LFS2-L-4 | 28 | 48 x 48 |
| LFS2-S-4 | 28 | 48 x 62 |
| LFS2-A-6 | 28 | 64 x 64 |
| LFS2-E-6 | 28 | 64 x 64 |
| LFS2-I-6 | 28 | 64 x 64 |
| LFS2-L-6 | 28 | 64 x 64 |
| LFS2-S-6 | 28 | 64 x 78 |
| LFS7-G-4 | 34 | 54 x 54 |
| LFS7-N-4 | 34 | 54 x 54 |
| LFS2-G-6 | 34 | 67 x 67 |
| LFS2-N-6 | 34 | 67 x 67 |
| LFS2-A-8 | 45 | 88 x 88 |
| LFS2-I-8 | 45 | 88 x 88 |
| LFS2-G-8 | 49 | 88 x 88 |
| LFS2-N-8 | 49 | 88 x 88 |

| Switch Body | | | | | |
|---|---|---|---|---|---|
| **Type** | **B1** | **B2** | **F** | **H** | **L** |
| LE7-16 | – | 28 | 36 | 63 | 51 |
| LE7-25/32 | – | 36 | 45 | 63 | 60 |
| LE7-40/63 | 48 | 36 | 54 | 72 | 74 |
| LE7-80/100 | 48 | 36 | 72 | 90 | 90 |

## LE7 Front Mount (3 Pole) with Central Nut Fixing Handle

Dimensions are in millimeters (inches). Dimensions not intended for manufacturing purposes.

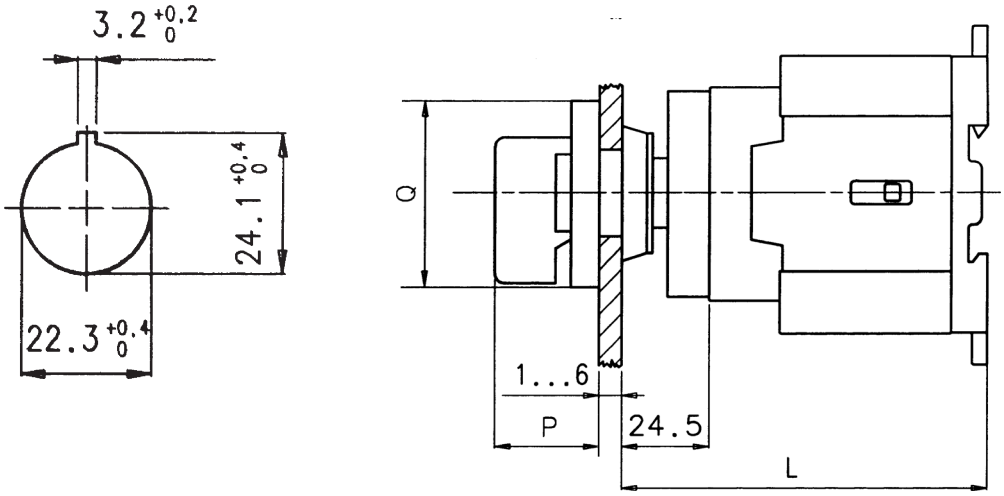


**Switch Handle**

| Type | P | Q |
|---|---|---|
| LFC2-A-4 | 29 | 48 x 48 |
| LFC2-E-4 | 29 | 48 x 48 |
| LFC2-I-4 | 29 | 48 x 48 |
| LFC2-L-4 | 29 | 48 x 48 |
| LFC2-G-6 | 34 | 67 x 67 |
| LFC2-N-6 | 34 | 67 x 67 |

**Switch Body**

| Type | L |
|---|---|
| LE7-16 | 75.5 |
| LE7-25/32 | 84.5 |
| LE7-40/63 | 98.5 |

## LA7 Base Mount (3 Pole) with Screw Fixing Handle

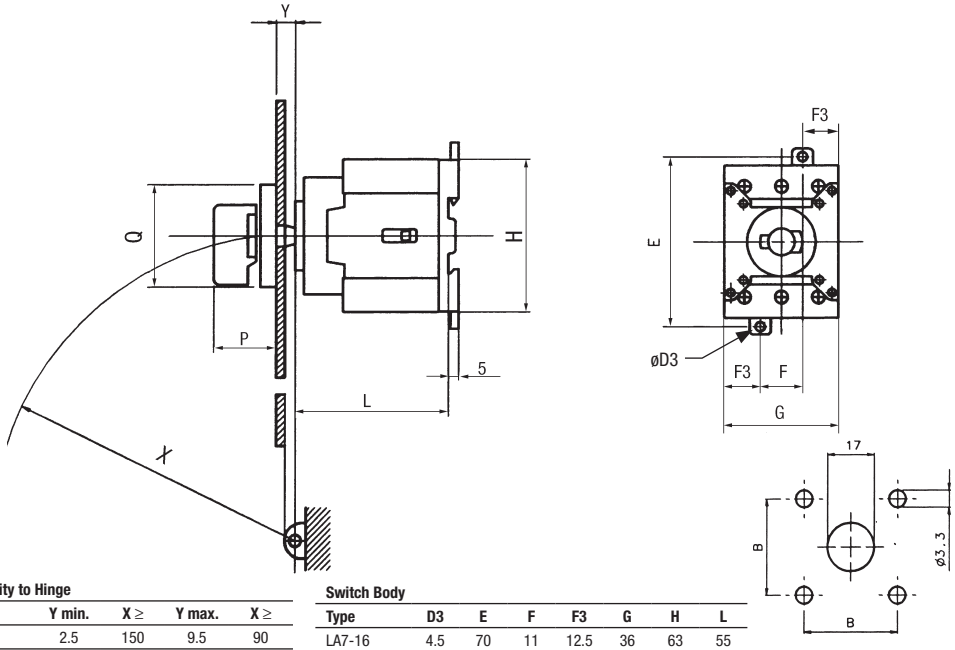


**Switch Handle**

| Type | P | Q | B |
|---|---|---|---|
| LFS2-A-4 | 28 | 48 x 48 | 36 |
| LFS2-E-4 | 28 | 48 x 48 | 36 |
| LFS2-I-4 | 28 | 48 x 48 | 36 |
| LFS2-L-4 | 28 | 48 x 48 | 36 |
| LFS2-S-4 | 28 | 48 x 62 | 36 |
| LFS2-A-6 | 28 | 64 x 64 | 48 (36) |
| LFS2-E-6 | 28 | 64 x 64 | 48 (36) |
| LFS2-I-6 | 28 | 64 x 64 | 48 (36) |
| LFS2-L-6 | 28 | 64 x 64 | 48 (36) |
| LFS2-S-6 | 28 | 64 x 78 | 48 (36) |
| LFS7-G-4 | 34 | 54 x 54 | 36 |
| LFS7-N-4 | 34 | 54 x 54 | 36 |
| LFS2-G-6 | 34 | 67 x 67 | 48 (36) |
| LFS2-N-6 | 34 | 67 x 67 | 48 (36) |
| LFS2-A-8 | 45 | 88 x 88 | 48 |
| LFS2-I-8 | 45 | 88 x 88 | 48 |
| LFS2-G-8 | 49 | 88 x 88 | 48 |
| LFS2-N-8 | 49 | 88 x 88 | 48 |

**Proximity to Hinge**

| Type | Y min. | X ≥ | Y max. | X ≥ |
|---|---|---|---|---|
| LE7-16 | 2.5 | 150 | 9.5 | 90 |
| LE7-25/32 | 2.5 | 150 | 9.5 | 90 |
| LE7-40/63 | 2.5 | 150 | 9.5 | 90 |
| LE7-80/100 | 2.5 | 150 | 9.5 | 90 |

**Switch Body**

| Type | D3 | E | F | F3 | G | H | L |
|---|---|---|---|---|---|---|---|
| LA7-16 | 4.5 | 70 | 11 | 12.5 | 36 | 63 | 55 |
| LA7-25/32 | 4.5 | 70 | 15 | 15 | 45 | 63 | 59 |
| LA7-40/63 | 4.5 | 80 | 20 | 17 | 54 | 72 | 73 |
| LA7-80/100 | 5.6 | 95 | 25 | 23.5 | 72 | 90 | 89 |

## LA7 Base Mount (6 Pole) with Screw Fixing Handle

Dimensions are in millimeters (inches). Dimensions not intended for manufacturing purposes.

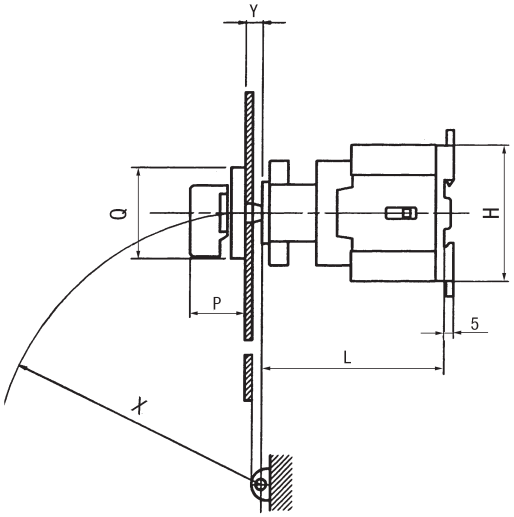


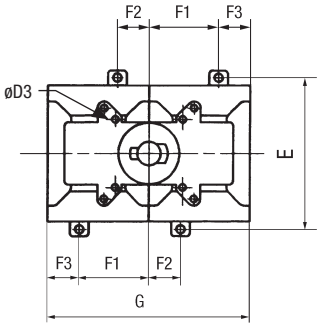


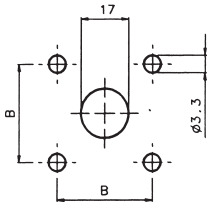


**Switch Handle**

| Type | P | Q | B |
|---|---|---|---|
| LFS2-A-4 | 28 | 48 x 48 | 36 |
| LFS2-E-4 | 28 | 48 x 48 | 36 |
| LFS2-I-4 | 28 | 48 x 48 | 36 |
| LFS2-L-4 | 28 | 48 x 48 | 36 |
| LFS2-S-4 | 28 | 48 x 62 | 36 |
| LFS2-A-6 | 28 | 64 x 64 | 48 (36) |
| LFS2-E-6 | 28 | 64 x 64 | 48 (36) |
| LFS2-I-6 | 28 | 64 x 64 | 48 (36) |
| LFS2-L-6 | 28 | 64 x 64 | 48 (36) |
| LFS2-S-6 | 28 | 64 x 78 | 48 (36) |
| LFS7-G-4 | 34 | 54 x 54 | 36 |
| LFS7-N-4 | 34 | 54 x 54 | 36 |
| LFS2-G-6 | 34 | 67 x 67 | 48 (36) |
| LFS2-N-6 | 34 | 67 x 67 | 48 (36) |
| LFS2-A-8 | 45 | 88 x 88 | 48 |
| LFS2-I-8 | 45 | 88 x 88 | 48 |
| LFS2-G-8 | 49 | 88 x 88 | 48 |
| LFS2-N-8 | 49 | 88 x 88 | 48 |

**Proximity to Hinge**

| Type | Y min. | X ≥ | Y max. | X ≥ |
|---|---|---|---|---|
| LE7-16 | 2.5 | 150 | 9.5 | 90 |
| LE7-25/32 | 2.5 | 150 | 9.5 | 90 |
| LE7-40/63 | 2.5 | 150 | 9.5 | 90 |
| LE7-80/100 | 2.5 | 150 | 9.5 | 90 |

**Switch Body**

| Type | D3 | E | F1 | F2 | F3 | G | H | L |
|---|---|---|---|---|---|---|---|---|
| LA7-16 | 4.5 | 70 | xx | 12.5 | 12.5 | 90 | 63 | 55 |
| LA7-25/32 | 4.5 | 70 | 30 | 15 | 15 | 90 | 63 | 84 |
| LA7-40/63 | 4.5 | 80 | 37 | 17 | 17 | 108 | 72 | 98 |
| LA7-80/100 | 5.6 | 95 | 48.5 | 23.5 | 23.5 | 144 | 90 | 114 |

## Type Q and Emergency Off Switch

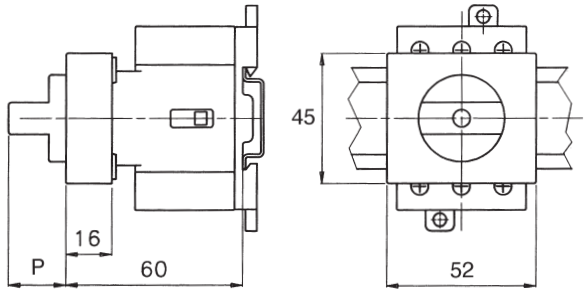


| Type | P |
|---|---|
| LA7-25(32)-1753-Q | 20 |
| LA7-25(32)-1753-R | 23 |

## LA7-SY/SB (Type R) Switch Handle

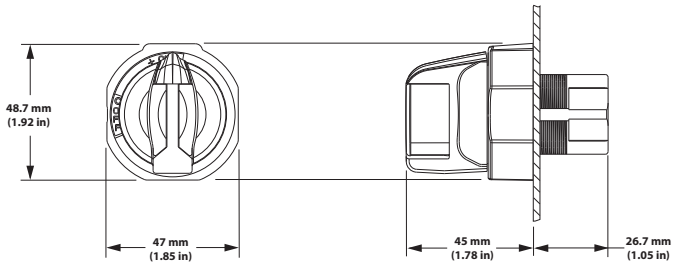


## LA7-SY/SB Assembly

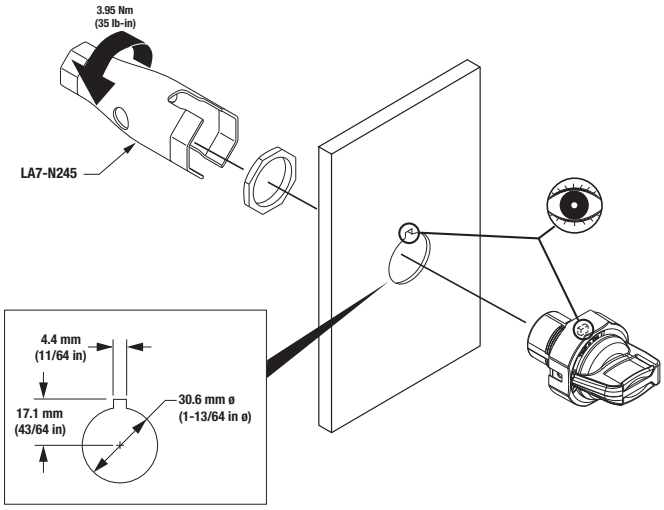

## L7 with Auxiliary Contact Blocks

Dimensions are in millimeters (inches). Dimensions not intended for manufacturing purposes.

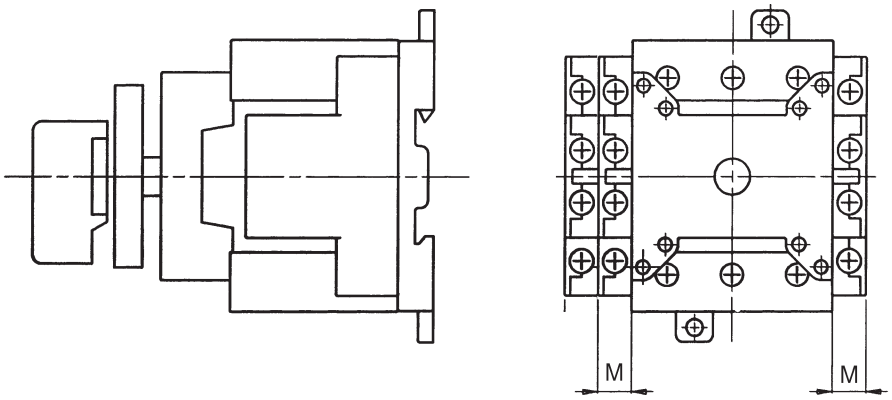


| Contacts | M |
|---|---|
| 1 N.O. + 1 N.C. | 9 |
| 2 N.O. + 2 N.C. | 18 |

## L7 with Ground, Neutral and Fourth Pole

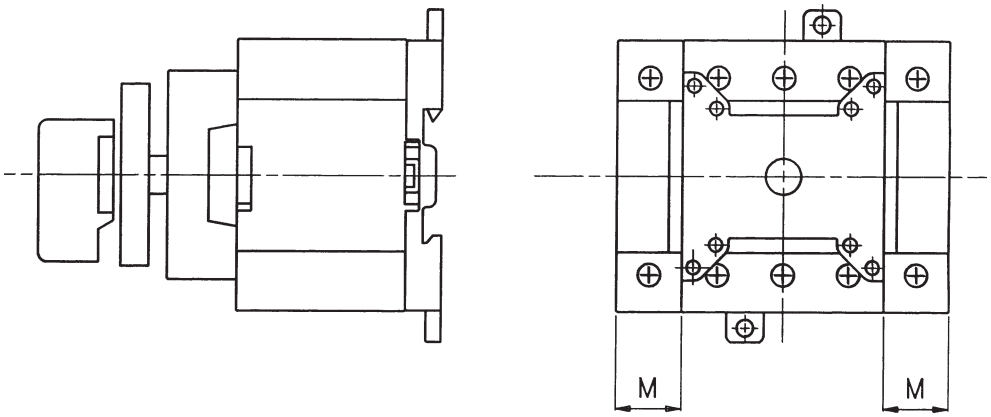


| Type | M |
|---|---|
| L7-16 | 12.5 |
| L7-20/32 | 14 |
| L7-40/63 | 17.5 |
| L7-80/100 | 22 |

## Metal Shaft Extension (LA2-G3393[4])

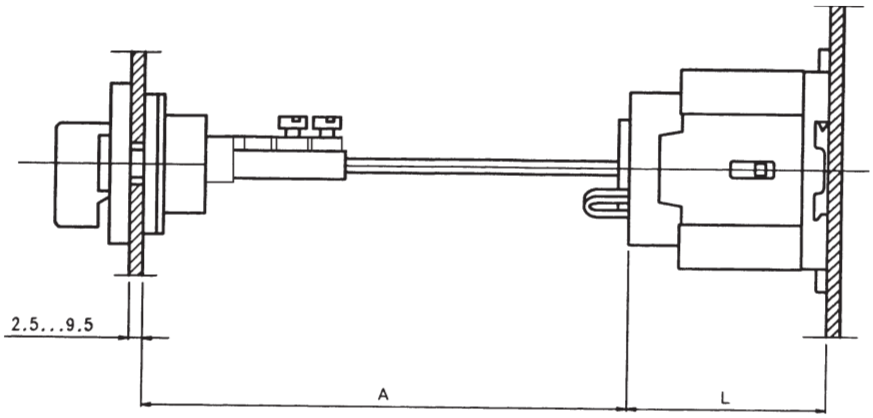


**Switch Body**

| Type | L |
|---|---|
| LA7-16 | 55 |
| LA7-20/32 | 59 |
| LA7-40/63 | 73 |
| LA7-80/100 | 89 |

**Shaft**

| Type | A |
|---|---|
| LA2-G3393 | 110…235 |
| LA2-G3394 | 230…350 |

## L7 Enclosed Motor Disconnect

Dimensions are in inches (millimeters). Dimensions not intended for manufacturing purposes.

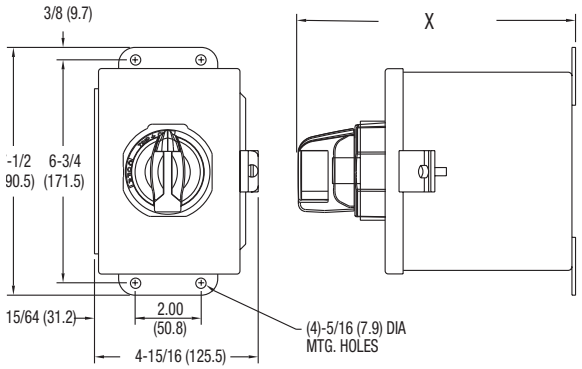


DIMENSION CODE A

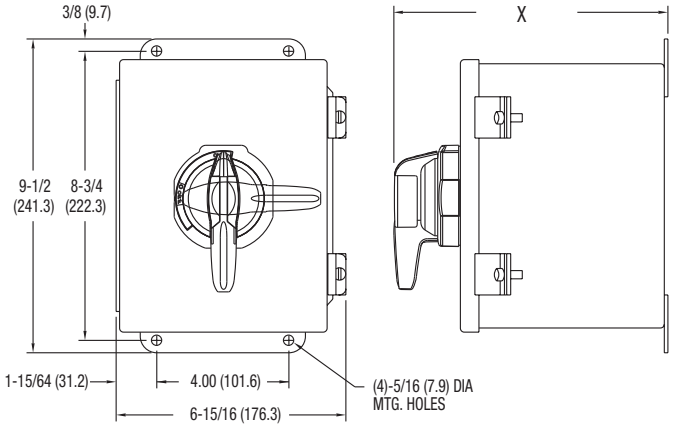


DIMENSION CODE B

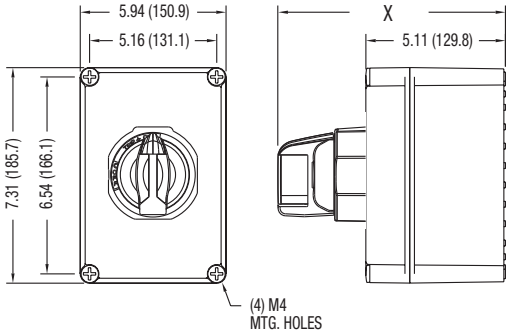


DIMENSION CODE C

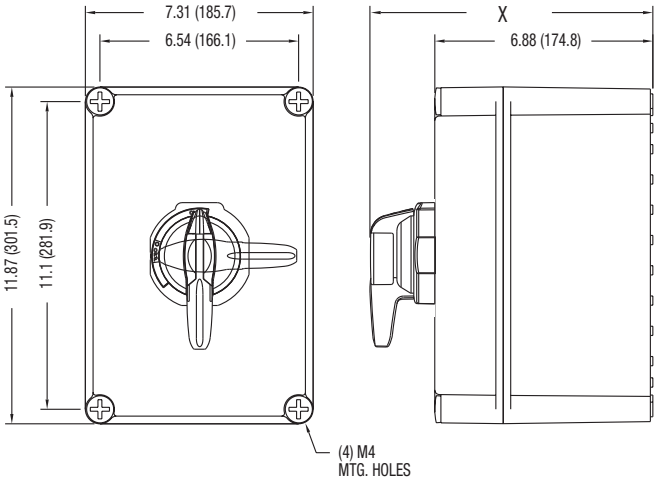


DIMENSION CODE D

| Dimension Code | Handle | Dim X | |
|---|---|---|---|
| | | inches | mm |
| A | LA7-SY/SB | 6-9/16 | 166.8 |
| | LFS2-_-6* | 6-1/8 | 155.8 |
| B | L11-PB/PY | 7-1/16 | 180.1 |
| | LFS2-_-6* | 6-11/16 | 169.1 |
| C | LA7-SY/SB | 6-1/4 | 158.7 |
| | LFS2-_-6* | 5-13/16 | 147.7 |
| D | L11-PB/PY | 8 | 203.7 |
| | LFS2-_-6* | 7-9/16 | 192.7 |

## LY7 Enclosed Load Disconnect Switch *(and Thermoplastic Enclosures)*

Dimensions are in millimeters (inches). Dimensions not intended for manufacturing purposes.

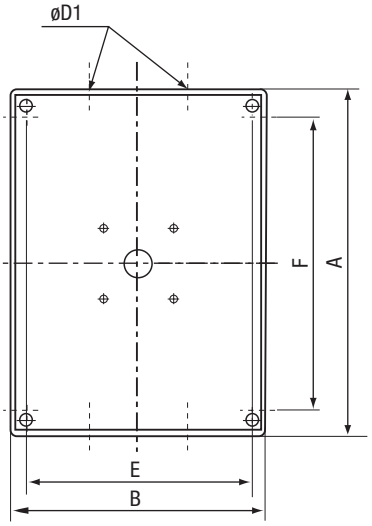


Figure 1

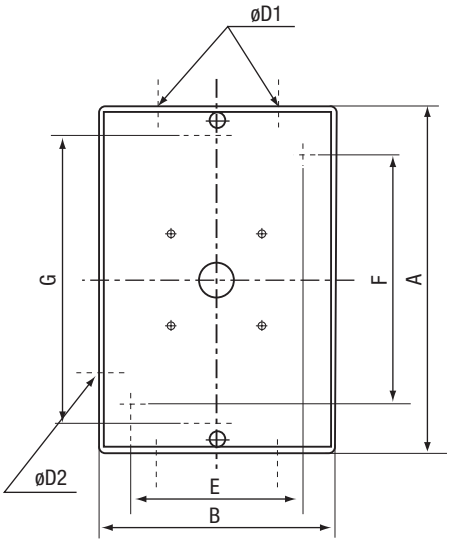


Figure 2

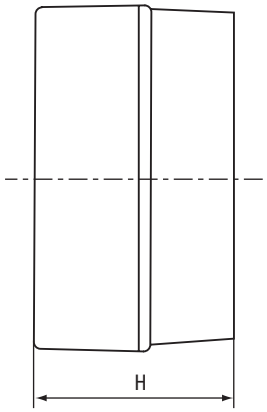


Enclosure Side View

| Type | Figure | Poles | Enclosure ABS | Enclosure Noryl | Height A | Width B | Knock Outs øD1 ❷ | Knock Outs øD2 | Mounting Holes E | Mounting Holes F | Mounting Holes G | Depth H |
|---|---|---|---|---|---|---|---|---|---|---|---|---|
| **LY7-16M** | 2 | 3 | ❶ | ❶ | 118 | 70 | 16/20 | ~ | 50 | 105 | ~ | 70 |
| | 2 | 6 | L7-G3663 | L7-G3664 | 180 | 125 | 25/30 | ~ | ~ | ~ | 145 | 105 |
| **LY7-25/32** | 2 | 3/4 | LA2-G3572 | LA2-G3576 | 150 | 95 | 22.5/28.5 | 22.5 | 60 | 115 | ~ | 86 |
| | 2 | 6 | L7-G3663 | L7-G3664 | 180 | 125 | 28.5/37.5 | ~ | ~ | ~ | 145 | 105 |
| **LY7-40/63** | 2 | 3/4 | L7-G3663 | L7-G3664 | 180 | 125 | 28.5/37.5 | ~ | ~ | ~ | 145 | 105 |
| | 1 | 6 | L7-G3665 | L7-G3666 | 230 | 175 | 37.5/47.5 | ~ | 155 | 195 | ~ | 120 |
| **LY7-80/100** | 1 | 3/4 | L7-G3665 | L7-G3666 | 230 | 175 | 37.5/47.5 | ~ | 155 | 195 | ~ | 120 |

❶ Empty enclosures not available for purchase
❷ LA7-16 units have one knock-out on each end. All others have two knock-outs on each end.

## Notes

# *Series L11 Fusible up to 800A & Non–fusible Disconnect Switches up to 1200 Amps*

## Suitable as a UL98 *Service Entrance Disconnecting Means*

**TIP!**

*To learn the basic differences between control, load and fusible disconnect switches and how to apply them, see our white paper Tech-LMSD in the online library.*

Sprecher + Schuh's L11 series of fused and nonfused disconnect switches complies with UL98 service entrance requirements and is NFPA 79 compliant. This family of rod operated switches is suitable for applications that require small panel space and superior short circuit protection.

## Big performance in a small package

L11 disconnects are rated up to 1200A and can be operated at up to 600V. They protect motors up to 500HP (@480V). The L11 may be installed on circuits capable of delivering up to 200,000A of short circuit fault current levels typically found in modern industrial facilities.

The new expanded offering of the L11 disconnect series ranges from 100A through 1200A. The L11 Fusible switches are available from 100A up to 800A, and are designed to be used with Class J & L fuses. The L11 Non-Fusible switches are available from 100A up to 1200A. Optional auxiliary contacts can also be mounted on the switch for control circuit use. The L11 family performance comes in a compact design, leaving room for additional branch circuit components within the panel.

## Maximum protection for downstream equipment

L11 switches are UL98 approved as a branch circuit protection device and are engineered to provide excellent short-circuit protection for downstream equipment up to 200kA. The L11 fusible switches accept the latest small dimension Class CC, J, L and HRCII fuses.

This Type 2 protection limits let-through currents to levels specified for IEC equipment, and ensures that when the short circuit is cleared, the device will be operable.

## Meets the toughest safety standards

The L11 offers a modular universal internal handle which provides an interlocked handle for test mode use (30A/60A) and UL508A and NFPA 79 compliance in North America. The L11 30A & 60A are equipped with removable fuse carriers which provide dead-front switch protection during fuse change-out. Fuse carriers with neon blown fuse indicators are also available as an option on 30A &60A models. Test mode D7 auxiliary contacts may be installed to provide test capability of control circuit without energizing the main contacts for the L11-30A/60A swicthes. The L11 switches meet IP20 for finger-safe wiring terminals and IP30 for touch-safe fuse carriers.

## NFPA 79 Compliant

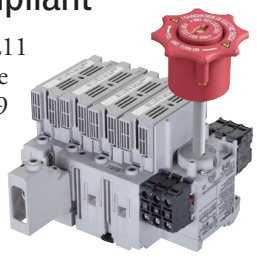

All L11 30/60A & L11 100A…800A Fusible switches are NFPA79 compliant, which meets the following guidelines under the NFPA 79 standards 5.3.3.1 and 6.2.3.1.2.

The supply Circuit Disconnecting Device shall:

- Be provided with a permanent means permitting it to be locked in the open position only independent of the door position.
- Be operable, by qualified persons, independent of the door position without the use of accessory tools or devices.

The interlocking means shall:

- Be reactivated automatically when the door is closed.
- Prevent closing of the disconnecting means while the enclosure door is open, unless an interlock is operated by deliberate action.

## International standards and approvals

All Sprecher + Schuh L11 disconnect switches are UL Listed under File Number E47426, CSA, CE Marked and are designed to meet IEC 947-3, and applicable NEMA requirements.

## UL/CSA Fused Disconnect Switches ❺

| Switch | Amp Rating (A) | Maximum Horsepower ❶ 1 Ø (60Hz) 120V | 1 Ø (60Hz) 240V | Three Phase (60Hz) 240V | Three Phase (60Hz) 480V | Three Phase (60Hz) 600V | DC 125V | DC 250V | Catalog Number | Price | Dimension Code |
|---|---|---|---|---|---|---|---|---|---|---|---|
| 30A & 60A Typical L11-J100A...L800A Typical | **UL Class CC and CSA HRCI-Misc Fuses ❷** | | | | | | | | | | |
| | 30 | 2 | 3 | 7.5 | 15 | 20 | 3 | 5 | **L11-C30-1753** | **320** | A1 |
| | **UL Class J and CSA HRCI-J Fuses ❷** | | | | | | | | | | |
| | 30 | 2 | 3 | 7.5 | 15 | 20 | 3 | 5 | **L11-J30-1753** | **340** | A1 |
| | 60 | 3 | 10 | 15 | 30 | 50 | 5 | 10 | **L11-J60-1753** | **435** | B1 |
| | 100 | 7.5 | 15 | 30 | 60 | 75 | 7.5 | 20 | **L11-J100-1753** | **659** | F5 |
| | 200 | ~ | 25 | 60 | 125 | 150 | 15 | 40 | **L11-J200-1753** | **1470** | F6 |
| | 400 | ~ | 50 | 125 | 250 | 350 | 20 | 50 | **L11-J400-1753** | **2780** | F7 |
| | 600 | ~ | ~ | 200 | 400 | 500 | ~ | ~ | **L11-J600-1753** | **4740** | F8 |
| | **UL Class L and CSA HRCII-L Fuses** | | | | | | | | | | |
| | 800 | ~ | ~ | 200 | 500 | 500 | ~ | ~ | **L11-L800-1753** | **6170** | F9 |
| | **CSA HRCII-C Fuses** | | | | | | | | | | |
| | 30 | 2 | 3 | 7.5 | 15 | 20 | 3 | 5 | **L11-H30-1753** | **336** | B1 |
| | 60 | 3 | 10 | 15 | 30 | 50 | 5 | 10 | **L11-H60-1753** | **427** | B1 |

Items in Gray available by Special Order only.

## UL/CSA Non-Fused Disconnect Switches ❸

| Switch | ❹ Amp Rating (A) | Maximum Horsepower 1 Ø (60Hz) 120V | 1 Ø (60Hz) 240V | Three Phase (60Hz) 240V | Three Phase (60Hz) 480V | Three Phase (60Hz) 600V | DC 125V | DC 250V | No. of Poles | Catalog Number | Price | Dimension Code |
|---|---|---|---|---|---|---|---|---|---|---|---|---|
| 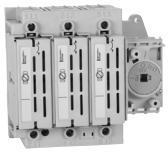 30A & 60A Typical NU100A...1200A Typical | 30 | 2 | 3 | 7.5 | 15 | 20 | 3 | 5 | 3 | **L11-N30-1753** | **295** | A2 |
| | 60 | 3 | 10 | 15 | 30 | 40 | 5 | 10 | 3 | **L11-N60-1753** | **389** | B2 |
| | 100 | 7.5 | 15 | 30 | 75 | 100 | 10 | 15 | 3 | **L11-NU100-1753** | **659** | F1 |
| | 200 | ~ | 50 | 75 | 150 | 200 | 15 | 15 | 3 | **L11-NU200-1753** | **1470** | F1 |
| | 400 | ~ | ~ | 125 | 250 | 350 | 20 | 50 | 3 | **L11-NU400-1753** | **2780** | F2 |
| | 600 | ~ | ~ | 200 | 400 | 350 | 20 | 50 | 3 | **L11-NU600-1753** | **3900** | F3 |
| | 800 | ~ | ~ | 200 | 500 | 500 | ~ | ~ | 3 | **L11-NU800-1753** | **5460** | F4 |
| | 1200 | ~ | ~ | 200 | 500 | 500 | ~ | ~ | 3 | **L11-NU1200-1753** | **11900** | F4 |

| ❺ For Fuse Status Option Add the following to List Price | |
|---|---|
| L11-C30/J30 | **14** |
| L11-J60/H30/H60 | **18** |

### *Ordering Instructions*

- Specify Disconnect Switch catalog number (this page)
- Specify desired switch handle catalog number (page L30)
- Specify desired operating shaft catalog number (page L31)
- Specify desired accessories (starting on page L32)

❶ Time delay fuses may be required to utilize the disconnect switch at its maximum horsepower rating.
❷ Only UL listed Class CC, J and CSA Certified HRCI-J fuses are suitable for use with these disconnect switches.
❸ Non-fused disconnect switches must use separately installed fuses for upstream short circuit protection.
❹ 30A UL-rated device has $I_{the}$ of 40 A per IEC. 60A UL-rated device has $I_{the}$ of 80A per IEC.
❺ To order a fusible switch with fuse status indicator on 30A and 60A switches, add an "S" to the end of the catalog number. For example, L11-J30-1753 changes to L11-J30-1753**S**. Not available on J100…J600, or L800 devices. Add $18.00.

## 4th-Pole Modules (for 30A & 60A only) ❹

| Switch *(typical)* | Amp Rating (A) | Maximum Horsepower ❶ 1 Ø (60Hz) 120V | 1 Ø (60Hz) 240V | Three Phase (60Hz) 240V | Three Phase (60Hz) 480V | Three Phase (60Hz) 600V | DC 125V | DC 250V | Fuses | Catalog Number | Price | Dimension Code |
|---|---|---|---|---|---|---|---|---|---|---|---|---|
| L11-30-NJ | **UL Class CC and CSA HRCI-MISC Fuses** | | | | | | | | | | | |
| | 30 | 2 | 3 | 7.5 | 15 | 20 | 3 | 5 | 30A CC, HRCI-Misc | **L11-30-NC** | **76.90** | A1 |
| | **UL Class J and CSA HRCI-J Fuses** | | | | | | | | | | | |
| | 30 | 2 | 3 | 7.5 | 15 | 20 | 3 | 5 | 30A J, HRCI-J | **L11-30-NJ** | **76.90** | A1 |
| | 60 | 3 | 10 | 15 | 30 | 50 | 5 | 10 | 60A J, HRCI-J | **L11-60-NJ** | **96.30** | B1 |
| | **CSA HRCII-C Fuses** | | | | | | | | | | | |
| | 30 | 2 | 3 | 7.5 | 15 | 20 | ~ | ~ | 30A HRCII-C | L11-30-NH | **76.90** | B1 |
| | 60 | 3 | 10 | 15 | 30 | 50 | ~ | ~ | 60A HRCII-C | L11-60-NH | **90.80** | B1 |
| L11-30-NN | **Non-Fused** | | | | | | | | | | | |
| | 30 ❷ | 2 | 3 | 7.5 | 15 | 20 | 3 | 5 | ~ | **L11-30-NN** | **61.70** | A2 |
| | 60 ❸ | 3 | 10 | 15 | 30 | 40 | 5 | 10 | ~ | **L11-60-NN** | **80.30** | B2 |

Items in Gray available by Special Order only.

| ❹ For Fuse Status Option Add the following to List Price | |
|---|---|
| L11-C30/J30 | **14** |
| L11-J60/H30/H60 | **18** |

**4th-Pole Modules** must be ordered separately and field installed to existing L11 Disconnect Switch.

L11-30-NN

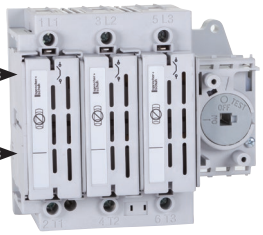

L11-N30-1753

## Replacement Mounting Hardware

| Accessory | Description | Switch Dimension Code | Pkg Qty | Catalog Number | Price |
|---|---|---|---|---|---|
| | (1) set screw, (1) shaft clip, and (2) #8 M4 screws | A1, A2 | 2 | **L11-30-HDWR** | **3.22** |
| | (1) set screw, (1) shaft clip, and (4) #8 M4 screws | B1, B2 | 4 | **L11-60-HDWR** | **4.70** |
| | (8) HM10 25mm bolts, (8) HM10 nuts, (16) M10 washers | F1 | 1 | **L11-HF-200-4U** | **233.00** |
| | (8) HM12 30mm bolts, (8) HM12 nuts, (16) M12 washers | F2 | 1 | **L11-HF-400-4U** | **369.00** |
| | (8) HM10 16mm bolts, (8) HM10 washers | F6 | 1 | **L11-HF-250-3BDU** | **90.10** |
| | (8) HM8 16mm bolts, (8) HM8 washers, (6) HM10 35mm bolts, (6) M10 nuts, (12) M10 washers | F7 | 1 | **L11-HF-400-3BU** | **369.00** |
| | (8) HM12 30mm bolts, (8) HM12 washers | F8, F9 | 1 | **L11-HF-800-3U** | **249.00** |

❶ Time delay fuses may be required to utilize the disconnect switch at its maximum horsepower rating.
❷ 30A UL-rated device has $I_{the}$ of 40 A per IEC.
❸ 60A UL-rated device has $I_{the}$ of 80A per IEC.

❹ To order a 4th pole module for 30A or 60A switches with fuse status indicator, add an "S" to the end of the catalog number. For example, L11-30-NC changes to L11-30-NC**S**. Not available on J100…J600, or L800 devices. Add $18.00.

## Switch Handle Assemblies (accepts 3 Padlocks)

| Switch Handle Assembly ❶❷ | Description | For use with | Color | Degree of Protection | Catalog Number | Price |
|---|---|---|---|---|---|---|
| L11-PY | **Padlockable Handle - Standard**<br>• 80 x 114 mm<br>• Configurable for defeatable or non-defeatable ❸ | L11-30…60A | Black | Type 3R, 3, 12, 4, 4X, IP66 | **L11-PB** | **48.10** |
| | | | Red/Yellow | Type 3R, 3, 12, 4, 4X, IP66 | **L11-PY** | **48.10** |
| L11-PBT | **Padlockable Handle - Test Mode**<br>• 80 x 114 mm<br>• Configurable for defeatable or non-defeatable ❸ | L11-30…60A | Black | Type 3R, 3, 12, 4, 4X, IP66 | **L11-PBT** | **50.90** |
| | | | Red/Yellow | Type 3R, 3, 12, 4, 4X, IP66 | **L11-PYT** | **50.90** |
| L10-HM4 | **Padlockable Operating Handle**<br>• Standard orientation with de-feater | L11-100…400A | Black | Type 1, 3R, 12, 4, 4X – IP66 | **L10-HM4** | **96.20** |
| | | | Red/Yellow | Type 1, 3R, 12, 4, 4X, IP66 | **L10-HM4E** | **96.20** |
| L10-HM4E-N2 | **Padlockable Operating handle**<br>• Standard orientation without defeater | L11-100…400A | Black with light grey | Type 1, 3R, 12, 4, 4X – IP66 | **L10-HM4-N2** | **96.20** |
| | | | Red/Yellow | Type 1, 3R, 12, 4, 4X – IP66 | **L10-HM4E-N2** | **96.20** |
| L11-HM4-L | **Padlockable Operating Handle**<br>• Standard orientation with de-feater | L11-600…1200A | Black with light grey | Type 1, 3R, 12, 4, 4X, IP65 | **L11-HM4-L** | **129.00** |
| | | | Red/Yellow | Type 1, 3R, 12, 4, 4X, IP65 | **L11-HM4E-L** | **129.00** |
| L11-HM4-N2-L | **Padlockable Operating Handle**<br>• Standard orientation without defeater | L11-600…1200A | Black with light grey | Type 1, 3R, 12, 4, 4X, IP65 | **L11-HM4-N2-L** | **129.00** |
| | | | Red/Yellow | Type 1, 3R, 12, 4, 4X, IP65 | **L11-HM4E-N2-L** | **129.00** |

**OSHA Lock Out/Tag Out Compliance (LOTO)**
OSHA CFR36 Section 1910 mandates that disconnects be able to be locked out while in the OFF position during servicing. All L11 handles comply with this important safety requitement. *Please see NFPA Article 430 for disconnect requirements of motor applications.*

❶ Mounting screws included with Switch Handle Assembly.
❷ Lockable in OFF position (and ON position with special modification).
❸ Switch handle can be field modified to be defeatable or non-defeatable.

## Metal Operating Shafts ❶

| Shaft *(typical)* | For use with handle type… | Operating Shaft Length mm (in) | Catalog Number | Price |
|---|---|---|---|---|
| L11-S1…S2 | L11-P/L11-P_T for L11-30…60A | 305 (12) | **L11-S1** | **20.20** |
| | | 533 (21) | **L11-S2** | **26.70** |
| L11-R7…R8 L11-R9…R12 | L10-HM for L11 100…400A | 320 (12.6) | **L11-R7** | **45.90** |
| | | 580 (22.8) | **L11-R8** | **85.10** |
| | L11-HM for fused L11 600…800A | 320 (12.6) | **L11-R11** | **49.40** |
| | | 560 (22) | **L11-R12** | **68.30** |
| | L11-HM for Non-fused L11 600…1200A | 320 (12.6) | **L11-R9** | **58.90** |
| | | 560 (22) | **L11-R10** | **76.50** |
| **NFPA 79 Handle Kit** - Internal handle that permits operation of the disconnect when the panel door is open, in compliance with NFPA79. • Includes NFPA 79 internal operating handle with shaft | | L11-P/L11-P_T | 305 (12) | **L11-N1** | **84.20** |
| | | | 533 (21) | **L11-N2** | **90.40** |
| | ❷ | L10-HM4 (L11 fused 100…400A) | 320 (12.6) | **L11-HM4-NFPA1** | **228.00** |
| | | | 560 (22) | **L11-HM4-NFPA3** | **228.00** |
| | | L11-HM4_-L (L11 fused 600…800A) | 320 (12.6) | **L11-HM4-NFPA2** | **228.00** |
| | | | 560 (22) | **L11-HM4-NFPA4** | **228.00** |

## Operating Shaft Accessories

| Accessory | Description | Switch Dimension Code | Pkg Qty | Catalog Number | Price |
|---|---|---|---|---|---|
| 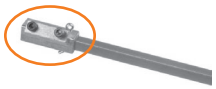 | **Operating Shaft Coupler -** Used with L11-S1 and L11-S2 shafts to extend shaft length an additional 120 mm (4.75 in). | A1, A2, B1, B2 | 1 | **L10-SC1** | **35.90** |

❶ See page L50 for Shaft dimensions.
❷ The L11-NU100…NU1200 Non-Fused switches do not have a means to be locked in the OFF position, therefore are not in compliance with NFPA79 and should not be used with L11-HM4-NFPA* handle kits.

## Disconnect Switch Padlock Accessory (for 30A & 60A only) ❶❺

| Accessory | Description | Switch Dimension Code | Pkg Qty | Catalog Number | Price |
|---|---|---|---|---|---|
| | **Disconnect Switch Padlock Accessory** | A1, A2, B1, B2 | 1 | **L11-PLA1** | **12.50** |

## Replacement Fuse Carriers (for 30A & 60A only)

| Accessory | Description | Pkg Qty | Without Fuse Status Indication | | With Fuse Status Indication | |
|---|---|---|---|---|---|---|
| | | | Catalog Number | Price | Catalog Number | Price |
| L11-J30-FC | **30A CC Fuse Carrier** | 1 | **L11-C30-FC** | **24.30** | **L11-C30-FCS** | **32.10** |
| | **30A J Fuse Carrier** | 1 | **L11-J30-FC** | **24.30** | **L11-J30-FCS** | **32.10** |
| | **60A J Fuse Carrier** | 1 | **L11-J60-FC** | **32.10** | **L11-J60-FCS** | **42.90** |
| | **30A CSA HRCII-C Fuse Carrier** | 1 | **L11-H30-FC** | **23.30** | **L11-H30-FCS** | **31.20** |
| | **60A CSA HRCII-C Fuse Carrier** | 1 | **L11-H60-FC** | **31.20** | **L11-H60-FCS** | **41.60** |
| *Neon Fuse Status Indication* 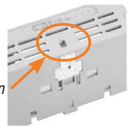 L11-J30-FCS | **30A Non-Fuse Carrier** | 1 | **L11-N30-FC** | **21.50** | | |
| | **60A Non-Fuse Carrier** | 1 | **L11-N60-FC** | **26.70** | | |

Items in Gray are Special Order.

## Auxiliary Contact Blocks

| Accessory | Description | For use with ... | Contact Material | Pkg Qty | Catalog Number | Price |
|---|---|---|---|---|---|---|
| | **Contact Block ❷❸**<br>**Note:** Sold only in multiples of 10. Order (quantity of) 10 to receive one package of 10 pieces. | All L11-30…60A<br>All Fusible switches<br>L11-100…800A | N.O. | 10 | **D7-X10** | **See Section H** |
| | | | N.C. | | **D7-X01** | |
| | | | N.O.E.M. | | **D7-X10E** | |
| | | | N.C.L.B. | | **D7-X01L** | |
| | | | N.O. w/ spring-clamp | | **D7-Q10** | |
| | | | N.CO. w/ spring-clamp | | **D7-Q01** | |
| | **Auxiliary Contact Block ❹**<br>N.O.E.B./N.C. | All L11 Non-Fused<br>100...1200A | 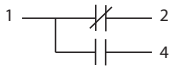 | 1 | **L11-1STNONC** | **14.10** |
| | | | 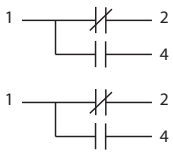 | 1 | **L11-2NDNONC** | **17.50** |

❶ For Padlock with ø3…6mm.
❷ Also used for test mode function on 30A…60A switches.
❸ Maximum auxiliary contact blocks allowed to be mounted on switches:
- Max 6 for 30A…60A switches
- Max 4 for L11-J100…200A switches
- Max 8 for L11-J400…J600, & L800 switches

❹ Only one auxiliary type can be mounted on switch. Auxiliaries cannot be combined.
❺ Fusible L11-100…800A has built in lockable feature on switch.

## Terminal Protective Covers ❶❷❸

| Accessory | Description | No. of poles Protected per pkg. | Mounting Position | Switch Dim. Code | Qty per Pkg | Pkg qty req. for Line & Load protection | Catalog Number | Price Each |
|---|---|---|---|---|---|---|---|---|
| order 2 for 1 pkg of 2 shrouds | **30A Terminal Shroud** | 6 | line or load side | A1, A2 | 2 | 1 | **L11-30-C3** | **9.99** |
| | **60A Terminal Shroud** | 6 | line or load side | B1, B2 | 2 | 1 | **L11-60-C3** | **13.80** |
| order 2 for 1 pkg of 2 shrouds | **30A Terminal Shroud** | 2 | line or load side | A1, A2 | 2 | 1 | **L11-30-C1** | **4.10** |
| | **60A Terminal Shroud** | 2 | line or load side | B1, B2 | 2 | 1 | **L11-60-C1** | **5.51** |
| | | | | | | | | **Pkg Price** |
| order 1 for 1 package of 3 shrouds | **UL Terminal Shroud** for L11- UL Fused 600A…800A | 3 | line or load side | F17 | 3 | 2 ❸ | **L11-LNC29** | **102.00** |
| | **UL Terminal Shroud** for L11- UL Fused 200A | 3 | line or load side | F6 | 3 | 2 | **L11-LNC31** | **158.00** |
| | **UL Terminal Shroud** for L11 - UL Fused 400A | 3 | line or load side | F7 | 3 | 2 | **L11-LNC32** | **105.00** |
| 1 shield covers all 3 poles | **UL Terminal Shield** for L11- UL Non-fused 100A…200A | 3 | line side | F1 | 1 | 1 | **L11-LNC17** | **30.70** |
| | | 3 | load side | F1 | 1 | 1 | **L11-LNC18** | **30.70** |
| | UL Non-fused 400A | 3 | line side | F2 | 1 | 1 | **L11-LNC20** | **75.20** |
| | | 3 | load side | F2 | 1 | 1 | **L11-LNC21** | **75.20** |
| | UL Non-fused 600A | 3 | line or load | F3 | 1 | 1 ❸ | **L11-LNC23** | **109.00** |
| | UL Non-fused 800A…1200A | 3 | line or load | F4 | 1 | 1 ❸ | **L11-LNC25** | **146.00** |

## Multi-Tap Terminal Lugs ❶

| Accessory | Description | Switch Dimension Code | Pkg Qty | Catalog Number | Pkg Price |
|---|---|---|---|---|---|
| 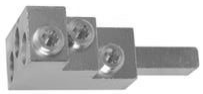 | **For 30A L11 Switches**<br>• Wire: (3) 8-14 AWG/1.5-10 mm²<br>• Torque: 14 lb-in/1.6 Nm | A1, A2 | 1 | **L11-30-MTL3** | **26.00** |
| | **For 60A L11 Switches**<br>• Wire: (3) 4-14 AWG/2-25 mm²<br>• Torque: 24 lb-in/2.8 Nm | B1, B2 | 1 | **L11-60-MTL3** | **31.20** |

❸ L11 Switches include various protection covers as standard. See table to order optional shrouds/shields separately.

| Switch Type | Terminal Shrouds | Terminal Shields | Terminal Lugs | Notes |
|---|---|---|---|---|
| L11-J30/60 A | N/A ❷ | N/A | Built-in | IP20 Touch-Safe by design |
| L11-J100 A | N/A | N/A | Built-in | IP20 Touch-Safe by design |
| L11-J200/400 A | Optional | N/A | Optional | Purchase optional items separately |
| L11-J600/L800 A | Includes 1 pkg L11-LNC29 for line side | N/A | Optional | Purchase optional items separately |
| L11-N30/60 A | N/A | N/A | Built-In | IP20 Touch-Safe by design |
| L11-NU100/400 A | N/A | Optional | Optional | Purchase optional items separately |
| L11-NU600 A | N/A | Includes 1 pkg L11-LNC23 for line side | Optional | Purchase optional items separately |
| L11-NU800/1200 A | N/A | Includes 1 pkg L11-LNC25 for line side | Optional | Purchase optional items separately |

❶ Includes integral plastic cover (not shown), for IP10 ingress rating only.
❷ L11-XX-CX shrouds are typically used to re-label power terminals when rotating the switch 180º.

## Terminal Lug Kits ❶

| Accessory | For use with… | Wire Size | Pkg Qty | Catalog Number | Pkg Price |
|---|---|---|---|---|---|
| order 1 for 1 package of 3 lugs | L11-J200 Fused<br>L11-NU100, L11-NU200 Non-Fused | (1) #6 - 300 MCM | 3 | **L11-TL1** | **42.80** |
| order 1 for 1 package of 3 lugs | L11-J400 Fused<br>L11-NU400 Non-Fused | (1) #4 - 600 MCM | 3 | **L11-TL3** | **146.00** |
| order 1 for 1 package of 3 lugs | L11-J400 Fused<br>L11-NU400 Non-Fused | (2) #6 - 350 MCM | 3 | **L11-TL5** | **198.00** |
| | L11-J600…L800 Fused<br>L11-NU600 Non-Fused | (2) #2 - 600 MCM | 3 | **L11-TL7** | **248.00** |
| order 1 for 1 package of 6 lugs | L11-NU800…NU1200 Non-Fused | (2) #2 - 600 MCM | 6 | **L11-TL9** | **682.00** |

❶ L11-30/60 Fused and Non-fused, and L11-J100 Fused disconnect switches are equipped with built-in terminal lugs.

## L11 Enclosed Motor Disconnects (UL and CSA Approved Enclosures)

| Amp/Horsepower Rating | | | | | | Type 3/4/12 Watertight, Dusttight Sheetmetal Enclosure | | | Type 4/4X Watertight, Corrosion-Resistant Stainless Steel Enclosure | | | Type 4/4X Watertight, Corrosion-Resistant Non-metallic Enclosure | | |
|---|---|---|---|---|---|---|---|---|---|---|---|---|---|---|
| UL/ CSA Amps | Horsepower | | | | | Catalog Number | Price | Dimension Code | Catalog Number | Price | Dimension Code | Catalog Number | Price | Dimension Code |
| | 1Ø (60 Hz) | | 3Ø (60 Hz) | | | | | | | | | | | |
| | 120V | 240V | 240V | 480V | 600V | | | | | | | | | |
| **Class CC Fused** | | | | | | | | | | | | | | |
| 30 | 2 | 3 | 7.5 | 15 | 20 | **L11-FC030P3** | **774** | A1 | **L11-CC030P3** | **918** | A1 | **L11-KC030P3** | **777** | A1 |
| **Class J Fused** | | | | | | | | | | | | | | |
| 30 | 2 | 3 | 7.5 | 15 | 20 | **L11-FJ030P3** | **718** | A1 | **L11-CJ030P3** | **918** | A1 | **L11-KJ030P3** | **796** | A1 |
| 60 | 3 | 10 | 15 | 30 | 50 | **L11-FJ060P3** | **851** | B1 | **L11-CJ060P3** | **1000** | B1 | **L11-KJ060P3** | **986** | B1 |
| 100 | 7.5 | 15 | 30 | 60 | 75 | **L11-FJ100P3** | **1342** | C1 | **L11-CJ100P3** | **2525** | C1 | **L11-KJ100P3** | **1342** | C1 |
| 200 | ~ | 25 | 60 | 125 | 150 | **L11-FJ200P3** | **2238** | D1 | **L11-CJ200P3** | **3460** | D1 | **L11-KJ200P3** | **2237** | D1 |
| 400 | ~ | 50 | 125 | 250 | 350 | **L11-FJ400P3** | **4123** | F1 | **L11-CJ400P3** | **6615** | F1 | **L11-KJ400P3** | **4122** | F1 |
| **Non-Fused** | | | | | | | | | | | | | | |
| 30 | 2 | 3 | 7.5 | 15 | 20 | **L11-FN030P3** | **525** | A2 | **L11-CN030P3** | **989** | A2 | **L11-KN030P3** | **525** | A2 |
| 60 | 3 | 10 | 15 | 30 | 50 | **L11-FN060P3** | **930** | B2 | **L11-CN060P3** | **1252** | B2 | **L11-KN060P3** | **930** | B2 |
| 100 | 7.5 | 15 | 30 | 75 | 100 | **L11-FN100P3** | **1342** | C1 | **L11-CN100P3** | **2462** | C1 | **L11-KN100P3** | **1342** | C1 |
| 200 | ~ | 50 | 75 | 150 | 200 | **L11-FN200P3** | **2238** | D1 | **L11-CN200P3** | **3460** | D1 | **L11-KN200P3** | **2237** | D1 |
| 400 | ~ | ~ | 125 | 250 | 350 | **L11-FN400P3** | **4123** | F1 | **L11-CN400P3** | **6615** | F1 | **L11-KN400P3** | **4122** | F1 |

*Larger sizes available. Contact your Sprecher + Schuh representative.*

### *Enclosed Disconnect Assemblies Include:*

- Disconnect Switch
- Black handle/shaft with ON/OFF marking. For a yellow and red handle, add suffix "E" to the end of the catalog number. Example: change L11-FN030P3 to L11-FN030P3**E**.
- Line & Load Terminal Lugs for Fused 200/400A & Non-Fused 100A…400A (Lugs are built-in on Fused 30/60/100A & Non-fused 30/60A switches).
- Two Ground Lugs mounted on back-panel

**NOTE:** Fusible accessory Shrouds, Non-Fusible accessory Shields must be purchased separately and installed by user. To add any accessory items into these standard assemblies, please contact your Sprecher+Schuh representative for a custom enclosed L11 request.

*L11-KJ060P3*

## Applications Within the United States and Canada

### General

The requirements for disconnect switches used in motor branch circuits rated 600V and less are defined in Article 430, Part J of the U.S. National Electrical Code (NEC), NFPA70. Canadian Electrical Code (CEC) requirements are very similar in the area of motor branch circuit disconnect requirements. For simplicity, we will treat the NEC and CEC requirements as being the same – and reference specific sections of the US National Electrical Code.

The requirements for properly sizing a disconnect switch are dependent on the type of application. The NEC refers to two types of applications: single motor and combination loads. A combination load consists of an application where two or more motors are used together or where one or more motors are used in combination with other loads, such as resistance heaters.

### Single Motor Applications

Section 430-110 Paragraph (a) states that the disconnect switch must have an ampere rating of at least 115% of the full load current rating of the motor.

**Example 1:** for a motor with a full-load current of 22A, the disconnect switch must be rated at least 25.3A (22 x 1.15).

If the disconnecting means under evaluation is rated in horsepower, the selection of the disconnect switch is even more straightforward; a disconnect switch must have a horsepower rating equal to, or greater than the horsepower rating of the motor at the applicable voltage.

**Example 2:** For a motor with a 10HP rating at 460V AC, the disconnect switch must be rated at least 10HP at 460V AC.

If the disconnect switch is rated in horsepower, and UL Listed, UL Component Recognized, or CSA Certified, it will meet the requirements for the 115% full-load current rating stipulated by the NEC.

### Combination Load Applications

Section 430-110 Paragraph (c) addresses the rating of the disconnecting means for combination loads. This paragraph essentially requires that the loads that "may be simultaneously on a single disconnecting means" be combined to provide equivalent full-load and locked-rotor currents for what is then to be considered as a single motor for the purpose of selecting the appropriate disconnecting means. This means that it is necessary to identify the particular combination of connected loads which can be operating simultaneously and will result in the maximum full-load and locked-rotor current sums.

The individual full-load current values are to be selected from Tables 430-148, 430-149, or 430-150 and the locked-rotor values are to be from Table 430-151.

The equivalent single motor full-load current is the sum of the simultaneously operating motor full-load currents and the rating in amperes of the other loads operating at the same time. The equivalent locked-rotor current is the sum of the simultaneously started motors' locked-rotor currents and the full-load currents of the remaining operating motor and non-motor loads.

The disconnecting means shall have a current rating equal to or greater then 115% of the equivalent single motor full-load current and have a horsepower rating equal to or greater than the horsepower rating determined from the equivalent locked-rotor summation.

Consider the following 460V application:

| Load | HP | Full-Load Current A |
|---|---|---|
| Motor 1 | 5 | 7.6 (simultaneous) |
| Motor 2 | 10 | 14.0 (not included) ❶ |
| Motor 3 | 15 | 21.0 (simultaneous) |
| Motor 4 | 20 | 27.0 (simultaneous) |
| Other | | 7.0 (simultaneous) |
| Total Equivalent | | 62.6 (simultaneous) |

❶ Motor 2 is not included in the total since it cannot operate simultaneously with the other motor, therefore, the disconnect switch must be rated at least 72A (1.15 x 62.6).

Consider now the locked-rotor current analysis for the same application:

| Load | HP | Locked Rotor Current A |
|---|---|---|
| Motor 1 | 5 | (7.6 FLA) 45.6 (simultaneous) |
| Motor 2 | 10 | 84.0 (not included) ❶ |
| Motor 3 | 15 | 126.0 (simultaneous) ❷ |
| Motor 4 | 20 | 162.0 (simultaneous) ❷ |
| Other | | 7.0 (simultaneous) |
| Total Equivalent | | 302.6 (simultaneous) |

❶ Note again that Motor 2 cannot operate simultaneously with the other loads.
❷ The largest equivalent locked-rotor current occurs when motors 3 and 4 start together while the other loads marked "simultaneous" are already operating. Since Motor 1 is not starting with Motors 3 and 4, its full-load current will be added to the total instead of its locked-rotor current.

Table 430-151, which provides the correlation between locked-rotor currents and HP ratings, shows that a 40 HP rating is the equivalent for 302.6 locked-rotor amperes.

Therefore, the disconnect selected for this application must have a current rating of at least 72A and a HP rating of at least 40 HP. In this case, an L10 disconnect switch rated for 100A and 60 HP at 460V would be an appropriate choice. What can be seen from this analysis is that, depending upon the number of motors that can start simultaneously, the actual size of the required disconnect is sometimes determined by the equivalent full load current (72A) and other times by the equivalent horsepower determined from the locked-rotor analysis (40 HP).

## Fused Disconnect Switches for UL Class Fuses and CSA HRCI-J

| Electrical Ratings | | | L11-C30-1753 | | L11-J30-1753 | | L11-J60-1753 | |
|---|---|---|---|---|---|---|---|---|
| **UL Fuse Type / CSA Fuse Type** | | | Class CC/HRCI-MISC ❶ | | Class J/HRCI-J | | Class J/HRCI-J | |
| **Maximum Fuse Cartridge Size** | | (A) | 30 | | 30 | | 60 | |
| **Maximum Voltage** | AC | (V) | 600 | | 600 | | 600 | |
| | DC | (V) | 250 | | 250 | | 250 | |
| **Ampere Rating** | | (A) | 30 | | 30 | | 60 | |
| **Maximum Short Circuit Prospective Fault Current** | | (kA) | 200 | | 200 | | 200 | |
| **Fuse Operating Characteristics** | | | Time Delay | Non-Time Delay | Time Delay | Non-Time Delay | Time Delay | Non-Time Delay |
| **Maximum Hp, 3Ø AC** | 200V 60 Hz | (Hp) | 5 | 3 | 7.5 | 3 | 15 | 7.5 |
| | 240V 60 Hz | (Hp) | 5 | 3 | 7.5 | 3 | 15 | 7.5 |
| | 480V 60 Hz | (Hp) | 10 | 5 | 15 | 5 | 30 | 15 |
| | 600V 60 Hz | (Hp) | 10 | 7.5 | 20 | 7.5 | 50 | 15 |
| **Maximum Hp, 1Ø AC** | 120V, 60 Hz | (Hp) | 0.75 | 0.5 | 2 | 0.5 | 3 | 1.5 |
| | 240V, 60 Hz | (Hp) | 2 | 1.5 | 3 | 1.5 | 10 | 3 |
| **Maximum Hp, DC** | 125V, DC | (Hp) | 2 | 3 | 3 | 2 | 5 | 5 |
| | 250V, DC | (Hp) | 3 | 5 | 5 | 5 | 10 | 10 |

| Mechanical Data | | | L11-C30-1753 | L11-J30-1753 | L11-J60-1753 |
|---|---|---|---|---|---|
| **Degree of Protection** (per IEC 60947-3) | | | | | |
| Switch Only | | | IP20 | IP20 | IP20 |
| Switch with Terminal Shield & Fuse Carriers | | | IP20 | IP20 | IP20 |
| **Mechanical Endurance ❷** | | Operations | 10,000 | 10,000 | 10,000 |
| **Handle Mechanism Operating Torque** | | N•m | 3.5 | 3.5 | 3.5 |
| | | lb•in | 35 | 35 | 35 |
| **Terminal Capacity** | | | | | |
| Power Terminals | | $mm^2$ | 2.5…10 | 2.5…10 | 2.5…25 |
| | | AWG | #14…#8 | #14…#8 | #14…#4 |
| Auxiliary Contact Terminals | | $mm^2$ | 2.5…4 | 2.5…4 | 2.5…4 |
| | | AWG | #14…#12 | #14…#12 | #14…#12 |
| **Maximum Number of Auxiliary Contacts** | | | 6 | 6 | 6 |
| **Approximate Weight** | | kg | 0.92 | 0.92 | 1.32 |
| | | lbs | 2.03 | 2.03 | 2.9 |
| **Minimum Enclosure Size** | | Height | 248 (9-3/4) | 248 (9-3/4) | 248 (9-3/4) |
| Approximate dimensions in | | Width | 171 (6-3/4) | 171 (6-3/4) | 197 (7-3/4) |
| millimeters (inches) | | Depth | 148 (5-13/16) | 148 (5-13/16) | 148 (5-13/16) |
| **Switch Dimensions Reference** (See dimension drawings) | | | A1 | A1 | B1 |

❶ CSA HRCI-MISC fuses must also be UL Listed as Class CC fuses.
❷ Based on Sprecher + Schuh tests in accordance with the requirements as defined in CSA C22.2 No. 4, IEC 60947-3, and UL 98.

## Fused Disconnect Switches for UL Class Fuses and CSA HRCI-J

| Electrical Ratings | | | L11-J100-1753 | L11-J200-1753 | L11-J400-1753 | L11-J600-1753 | L11-L800-1753 |
|---|---|---|---|---|---|---|---|
| **UL Fuse Type / CSA Fuse Type** | | | Class J/HRCI-J | | | | Class L |
| **Maximum Fuse Cartridge Size** | | (A) | 100 | 200 | 400 | 600 | 800 |
| **Maximum Voltage** | AC | (V) | 600 | 600 | 600 | 600 | 600 |
| | DC | (V) | 250 ❷ | 250 ❷ | 250 ❷ | 250 ❷ | 250 ❷ |
| **Ampere Rating** | | (A) | 100 | 200 | 400 | 600 | 800 |
| **Maximum Short Circuit Prospective Fault Current** | | (kA) | 200 | 200 | 200 | 200 | 200 |
| **Fuse Operating Characteristics** | | | | | | | |
| **Maximum Hp, 3Ø AC** | 200V 60 Hz | (Hp) | ~ | ~ | ~ | ~ | ~ |
| | 240V 60 Hz | (Hp) | 30 | 60 | 125 | 200 | 200 |
| | 480V 60 Hz | (Hp) | 60 | 125 | 250 | 400 | 500 |
| | 600V 60 Hz | (Hp) | 75 | 150 | 350 | 500 | 500 |
| **Maximum Hp, 1Ø AC** | 120V, 60 Hz | (Hp) | 7.5 | ~ | ~ | ~ | ~ |
| | 240V, 60 Hz | (Hp) | 15 | 25 | 50 | ~ | ~ |
| **Maximum Hp, DC** | 125V, DC | (Hp) | 7.5 | 15 | 20 | ~ | ~ |
| | 250V, DC | (Hp) | 20 | 40 | 50 | ~ | ~ |

| Mechanical Data | | | L11-J100-1753 | L11-J200-1753 | L11-J400-1753 | L11-J600-1753 | L11-L800-1753 |
|---|---|---|---|---|---|---|---|
| **Degree of Protection** (per IEC 60947-3) | | | | | | | |
| Switch Only | | | IP20 | IP20 | IP20 | IP20 | IP20 |
| Switch with Terminal Shield & Fuse Carriers | | | IP20 | IP20 | IP20 | IP20 | IP20 |
| **Mechanical Endurance ❶** | | Operations | 10,000 | 8,000 | 6,000 | 5,000 | 5,000 |
| **Handle Mechanism Operating Torque** | | N•m | 10 | 15 | 20 | 70 | 70 |
| | | lb•in | 88.5 | 132.8 | 177 | 620 | 620 |
| **Terminal Capacity** | | | | | | | |
| Power Terminals | | $mm^2$ | | 300 MCM | 600 MCM; 2 x 300 MCM | 2 x 600 MCM | 2 x 600 MCM |
| | | AWG | #1 | #6 | #2 or 2 x #6 | 2 x #2 | 2 x #2 |
| Auxiliary Contact Terminals | | $mm^2$ | 2.5…4 | 2.5…4 | 2.5…4 | 2.5…4 | 2.5…4 |
| | | AWG | #14…#12 | #14…#12 | #14…#12 | #14…#12 | #14…#12 |
| **Maximum Number of Auxiliary Contacts** | | | 4 | 8 | 8 | 8 | 8 |
| **Approximate Weight** | | kg | 2.4 | 3.6 | 4.85 | 20 | 20 |
| | | lbs | 5.3 | 7.9 | 10.7 | 44 | 44 |
| **Minimum Enclosure Size** Approximate dimensions in millimeters (inches) | | Height Width Depth | ~ | ~ | ~ | ~ | ~ |
| **Switch Dimensions Reference** (See dimension drawings) | | | F5 | F6 | F7 | F8 | F9 |

❶ Based on Sprecher + Schuh tests in accordance with the requirements as defined in CSA C22.2 No. 4, IEC 60947-3.
❷ 3-Poles in series.

## Non-Fused Disconnect Switches for CSA and UL Class Applications ❶

| Electrical Ratings | | | L11-N30-1753 | | L11-N60-1753 | | L11-NU100-1753 | L11-NU200-1753 |
|---|---|---|---|---|---|---|---|---|
| **Maximum Voltage** | AC | (V) | 600 | | 600 | | 600 | 600 |
| | DC | (V) | 250 | | 250 | | 250 | 250 |
| **Fuse Type** | | | ~ | | ~ | | J | J |
| **Ampere Rating** | | (A) | 30 ❷ | | 60 ❷ | | 100 | 200 |
| **Maximum Short Circuit Prospective Fault Current** | | (kA) | 200 | | 200 | | 200 | 200 |
| **Fuse Operating Characteristics ❸** | | | Time Delay | Non-Time Delay | Time Delay | Non-Time Delay | ~ | ~ |
| **Maximum Hp, 3Ø AC** | 200V 60 Hz | (Hp) | 7.5 | 3 | 15 | 7.5 | ~ | ~ |
| | 240V 60 Hz | (Hp) | 7.5 | 3 | 15 | 7.5 | 30 | 75 |
| | 480V 60 Hz | (Hp) | 15 | 5 | 30 | 15 | 75 | 150 |
| | 600V 60 Hz | (Hp) | 20 | 7.5 | 50 | 15 | 100 | 200 |
| **Maximum Hp, 1Ø AC** | 120V, 60 Hz | (Hp) | 2 | 0.5 | 3 | 1.5 | 7.5 | ~ |
| | 240V, 60 Hz | (Hp) | 3 | 1.5 | 10 | 3 | 15 | 50 |
| **Maximum Hp, DC** | 125V, DC | (Hp) | 3 | 2 | 5 | 5 | 10 | 15 |
| | 250V, DC | (Hp) | 5 | 5 | 10 | 10 | 15 | 15 |
| **Power Lost** | | (W) | 2 | | 6 | | ~ | ~ |

| Mechanical Data | | L11-N30-1753 | L11-N60-1753 | L11-NU100-1753 | L11-NU200-1753 |
|---|---|---|---|---|---|
| **Degree of Protection** (per IEC 60947-3) | | | | | |
| Switch Only | | IP20 | IP20 | IP20 | IP20 |
| Switch with Terminal Shield & Fuse Carriers | | IP20 | IP20 | IP20 | IP20 |
| **Mechanical Endurance ❸** | Operations | 10,000 | 10,000 | 10,000 | 10,000 |
| **Handle Mechanism Operating Torque** | N•m | 3.5 | 3.5 | 10 | 10 |
| | lb•in | 35 | 35 | 88.5 | 88.5 |
| **Terminal Capacity** | | | | | |
| Power Terminals | $mm^2$ | 2.5…10 | 2.5…25 | 300 MCM | 300 MCM |
| | AWG | #14…#8 | #14…#4 | #6 | #6 |
| Auxiliary Contact Terminals | $mm^2$ | 2.5…10 | 2.5…25 | ~ | ~ |
| | AWG | #14…#8 | #14…#4 | | |
| **Maximum Number of Auxiliary Contacts** | | 6 | 6 | 2 | 2 |
| **Approximate Weight** | kg | 0.81 | 1.14 | 1.67/2.1 | 1.67/2.1 |
| | lbs | 1.78 | 2.52 | 3.7/4.3 | 3.7/4.3 |
| **Minimum Enclosure Size** Approximate dimensions in millimeters (inches) | Height | 248 (9-3/4) | 248 (9-3/4) | ~ | ~ |
| | Width | 171 (6-3/4) | 197 (7-3/4) | | |
| | Depth | 111 (4-3/8) | 111 (4-3/8) | | |
| **Switch Dimensions Reference** (See dimension drawings) | | A2 | B2 | F1 | F1 |

❶ Non-fused disconnect switches must be used with separately installed fuses.
❷ When using CSA HRCI-J, HRCI-MISC (also UL Listed as Class CC) or HRCI-T fuses, and UL Class J, CC or T fuses.
❸ Based on Sprecher + Schuh tests in accordance with the requirements as defined in CSA C22.2 No. 4, IEC 60947-3, UL 1087 and UL 98.

## Non-Fused Disconnect Switches for CSA and UL Class Applications ❶

| Electrical Ratings | | | L11-NU400-1753 | L11-NU600-1753 | L11-NU800-1753 | L11-NU1200-1753 |
|---|---|---|---|---|---|---|
| **Maximum Voltage** | AC | (V) | 600 | 600 | 600 | 600 |
| | DC | (V) | 250 | 250 | 250 | 250 |
| **Fuse Type** | | | J | J | L | L |
| **Ampere Rating** | | (A) | 400 | 600 | 800 | 1200 |
| **Maximum Short Circuit Prospective Fault Current** | | (kA) | 200 | 200 | 100 | 100 |
| **Fuse Operating Characteristics ❸** | | | ~ | ~ | ~ | ~ |
| **Maximum Hp, 3Ø AC** | 200V 60 Hz | (Hp) | ~ | ~ | ~ | ~ |
| | 240V 60 Hz | (Hp) | 125 | 200 | 200 | 200 |
| | 480V 60 Hz | (Hp) | 250 | 400 | 500 | 500 |
| | 600V 60 Hz | (Hp) | 350 | 350 | 500 | 500 |
| **Maximum Hp, 1Ø AC** | 120V, 60 Hz | (Hp) | ~ | ~ | ~ | ~ |
| | 240V, 60 Hz | (Hp) | ~ | ~ | ~ | ~ |
| **Maximum Hp, DC** | 125V, DC | (Hp) | 20 | 20 | ~ | ~ |
| | 250V, DC | (Hp) | 50 | 50 | ~ | ~ |
| **Power Lost** | | (W) | ~ | ~ | ~ | ~ |

| Mechanical Data | | | L11-NU400-1753 | L11-NU600-1753 | L11-NU800-1753 | L11-NU1200-1753 |
|---|---|---|---|---|---|---|
| **Degree of Protection** (per IEC 60947-3) | | | | | | |
| Switch Only | | | IP20 | IP20 | IP20 | IP20 |
| Switch with Terminal Shield & Fuse Carriers | | | IP20 | IP20 | IP20 | IP20 |
| **Mechanical Endurance ❸** | Operations | | 6,000 | 6,000 | 3,500 | 3,500 |
| **Handle Mechanism Operating Torque** | | N•m | 14.5 | 37 | 50 | 50 |
| | | lb•in | 128.3 | 327.5 | 442 | 442 |
| **Terminal Capacity** | | | | | | |
| Power Terminals | | $mm^2$ | 600 MCM | 2 x 600 MCM | 4 x 600 MCM | 4 x 600 MCM |
| | | AWG | #2 | 2 x #2 | 4 x #2 | 4 x #2 |
| Auxiliary Contact Terminals | | $mm^2$ AWG | ~ | ~ | ~ | ~ |
| **Maximum Number of Auxiliary Contacts** | | | 2 | 2 | 2 | 2 |
| **Approximate Weight** | | kg | 3/3.8 | 8.2/10.3 | 11.6/14.5 | 11.6/14.5 |
| | | lbs | 6.6/8.4 | 18.1/22.7 | 25.6/32 | 25.6/32 |
| **Minimum Enclosure Size** Approximate dimensions in millimeters (inches) | | Height Width Depth | ~ | ~ | ~ | ~ |
| **Switch Dimensions Reference** (See dimension drawings) | | | F2 | F3 | F4 | F4 |

❶ Non-fused disconnect switches must be used with separately installed fuses.
❷ When using CSA HRCI-J, HRCI-MISC (also UL Listed as Class CC) or HRCI-T fuses, and UL Class J, CC or T fuses.
❸ Based on Sprecher + Schuh tests in accordance with the requirements as defined in CSA C22.2 No. 4, IEC 60947-3, UL 1087 and UL 98.

## Fused Disconnect Switches for CSA HRCII-C Fuses

| Electrical Ratings | | | L11-H30-1753 | L11-H60-1753 |
|---|---|---|---|---|
| **CSA Fuse Type/UL Fuse Type** | | | HRCII-C | HRCII-C |
| **Maximum Fuse Cartridge Size** | | (A) | 30 | 60 |
| **Maximum Voltage** | AC | (V) | 600 | 600 |
| **Ampere Rating** | | (A) | 30 | 60 |
| **Maximum Short Circuit Prospective Fault Current** | | (kA) | 200 | 200 |
| **Fuse Operating Characteristics** | | | | |
| **Maximum Hp, 3Ø AC** | 200V 60 Hz | (Hp) | 7.5 | 15 |
| | 240V 60 Hz | (Hp) | 7.5 | 15 |
| | 480V 60 Hz | (Hp) | 15 | 30 |
| | 600V 60 Hz | (Hp) | 20 | 50 |
| **Maximum Hp, 1Ø AC** | 120V, 60 Hz | (Hp) | 2 | 3 |
| | 240V, 60 Hz | (Hp) | 3 | 10 |

| Mechanical Data | | | L11-H30-1753 | L11-H60-1753 |
|---|---|---|---|---|
| **Degree of Protection** (per IEC 60947-3) | | | | |
| Switch Only | | | IP20 | IP20 |
| Switch with Terminal Shield & Fuse Carriers | | | IP20 | IP20 |
| **Mechanical Endurance** ❶ | | Operations | 10,000 | 10,000 |
| **Handle Mechanism Operating Torque** | | N•m | 3.5 | 3.5 |
| | | lb•in | 35 | 35 |
| **Terminal Capacity** | | | | |
| Power Terminals | | $mm^2$ | 2.5…10 | 2.5…25 |
| | | AWG | #14…#8 | #14…#4 |
| Auxiliary Contact Terminals | | $mm^2$ | 2.5…4 | 2.5…4 |
| | | AWG | #14…#12 | #14…#12 |
| **Maximum Number of Auxiliary Contacts** | | | 6 | 6 |
| **Approximate Weight** | | kg | 1.18 | 1.18 |
| | | lbs | 2.60 | 2.60 |
| **Minimum Enclosure Size** Approximate dimensions in millimeters (inches) | | Height | 248 (9-3/4) | 248 (9-3/4) |
| | | Width | 171 (6-3/4) | 197 (7-3/4) |
| | | Depth | 148 (5-13/16) | 148 (5-13/16) |
| **Switch Dimensions Reference** (See dimension drawings) | | | B1 | B1 |

❶ Based on Sprecher + Schuh tests in accordance with the requirements as defined in CSA C22.2 No. 4, IEC 60947-3, UL 1087 and UL 98.

## Environmental Data For All L11 Fused and Non-Fused Disconnect Switches

| Environmental Ratings | | L11-_30A…60A | L11-_100A…1200A ❶ |
|---|---|---|---|
| **Ambient Temperature** | | | |
| Open | [°C (F)] | –20…+55 (–4…+131) | –20…+70 (–4…+158) |
| Enclosed | [°C (F)] | –20…+40 (–4…+104) | –20…+70 (–4…+158) |
| Storage | [°C (F)] | –40…+65 (–40…+149) | –25…+70 (–13…+158) |
| **Altitude** (per IEC 60947-1) | [m] | 2,000 | 2,000 |
| **Relative Humidity** (per IEC 60947-1) | | 90% at +20°C (+68°F)<br>50% at +40°C (+104°F) | 90% at +20°C (+68°F)<br>50% at +40°C (+104°F) |

| Auxiliary Contact Ratings: | |
|---|---|
| **D7 Contact Ratings** | See Section H |
| **L11-1STNONC and L11-2NDNONC**<br>AC Rating (100mA min. load) | 10.1A at 250V AC<br>1/2 HP at 250V AC<br>1/4 HP at 125V AC |
| DC Rating (100mA min. load)<br>DC-13 General use (no HP ratings) | 0.5A at 125V DC<br>0.25A at 250V DC |

### Standards Compliance

IEC 60947-4-1/EN60947-3
BS EN60947-3
VDE 0660
CSA 22.2 No. 4
NEMA KS-1
UL 98

with L11-SDK2 Handle Kit
UL 98
CSA 22.2 No. 4

### Certifications

UL Listed (File No. E 47426, Guide WHTY)
CSA Certified (File No. LR1234)
CE
ASTA Certified
LOVAG Certified

with L11-SDK2 Handle Kit
UL Listed (File No. E47426, Guide WHTY)
CSA Certified (File No. LR1234)

## CSA HRCII Fuses (sold by others)

Dimensions in millimeters (inches). Dimensions are not intended to be used for manufacturing purposes.

- CSA fuse type: HRCII-C
- Voltage rating: 600V AC
- Interrupting rating: 200 000 A
- Standard cartridge sizes: 30, & 60 A
- Typical ampere ratings: 1…60 A
- Construction: Blade type for bolted connection
- Can be installed on Bulletin 194R disconnect switch
- Cat. Nos: L11-H30-1753, L11-H60-1753
- Where used: Canada

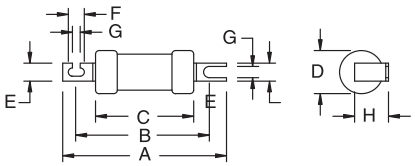


| Current Range [A] | A | B | C | D | E | F | G | H | J |
|---|---|---|---|---|---|---|---|---|---|
| 0…30 | 84.14 (3-5/16) | 71.04 (2-51/64) | 50.8 (2) | 20.64 (13/16) | 8.73 (11/32) | 7.54 (19/64) | 5.56 (7/32) | 23.81 (15/16) | 1.59 (1/16) |
| 31…60 | 88.9 (3-1/2) | 71.04 (2-51/64) | 50.8 (2) | 20.64 (13/16) | 12.7 (1/2) | 7.54 (19/64) | 5.56 (7/32) | 26.99 (1-1/16) | 1.59 (1/16) |

❶ Derate switch 1% for every 1ºC over 40ºC

## CSA HRCI Class CC Fuses (sold by others)

Dimensions in millimeters (inches). Dimensions are not intended to be used for manufacturing purposes.

- UL fuse type: Class CC
- CSA fuse type: HRCI-MISC
- Voltage rating: 600V AC
- Interrupting rating: 200 000 A
- Standard cartridge sizes: 30 A
- Typical ampere ratings: 1…30 A
- Construction: Ferrule type
- Can be installed on L11-C30-1753 disconnect switch
- Where used: North America

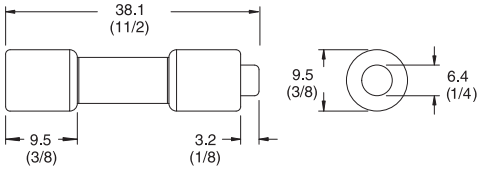


## CSA HRCI Class J Fuses (sold by others)

Dimensions in millimeters (inches). Dimensions are not intended to be used for manufacturing purposes.

- CSA fuse type: HRCI-J
- UL fuse type: Class J
- Voltage rating: 600V AC
- Interrupting rating: 200 000 A
- Standard cartridge sizes: 30, 60, 100, 200, and 400 A
- Typical ampere ratings: 1…600 A; Blade type for bolted connection
- Can be installed on L11 disconnect switch
  Cat. Nos: L11-J30…J400-1753
- Where used: North America

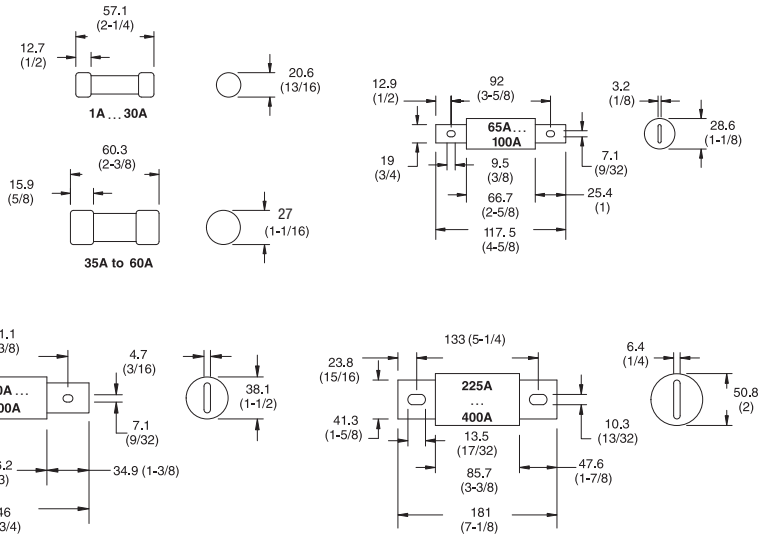

## Wiring Diagrams

| UL Listed, CSA Certified | Dimension Reference | Circuit |
|---|---|---|
| L11-C30-1753<br>L11-J30-1753<br>L11-J60-1753<br>L11-H30-1753<br>L11-H60-1753 | A1<br>A1<br>B1<br>B1<br>B1 | 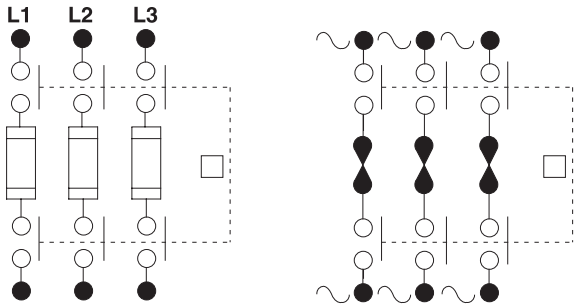 |
| L11-N30-1753<br>L11-N60-1753 | A2<br>B2 | 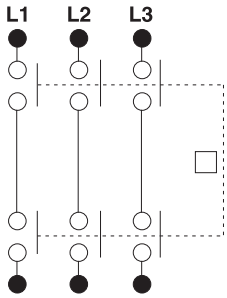 |
| L11-✱-1753 +<br>L11-✱-NC/NJ/NH | 3-Pole Switch +<br>4-Pole Module | 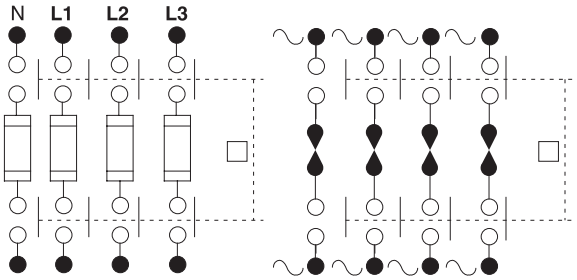 |

## L11 Fused and Non-Fused Disconnect Switches (30 & 60A)

Dimensions are in millimeters (inches). Dimensions not intended for manufacturing purposes.

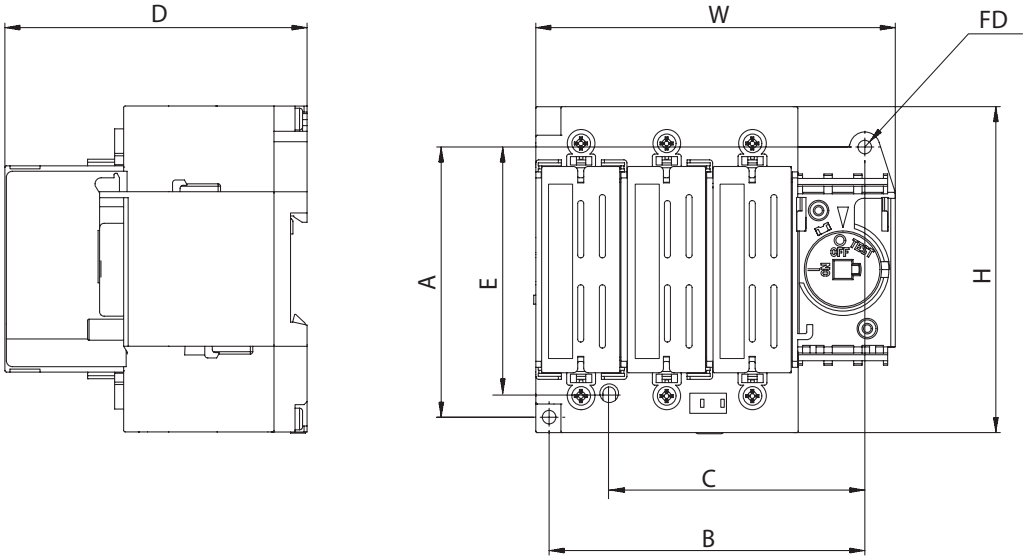


| Dimension Reference | Approximate Dimensions in mm (in) | | | | | | | |
|---|---|---|---|---|---|---|---|---|
| | H | W | D | A | B | C ❶ | E ❶ | FD |
| A1 | 108 (4-1/4) | 120 (4-3/4) | 101 (4) | 90 (3-9/16) | 105 (4-1/8) | 85 (3-11/32) | 82 (3-15/64) | 2-M4, 2-#8 |
| A2 | 108 (4-1/4) | 120 (4-3/4) | 80 (3-1/8) | 90 (3-9/16) | 105 (4-1/8) | 85 (3-11/32) | 82 (3-15/64) | 2-M4, 2-#8 |
| B1 | 113 (4-29/64) | 142 (5-19/32) | 114 (4-31/64) | 100 (3-15/16) | 120 (4-23/32) | N/A | N/A | 4-M4, 4-#8 |
| B2 | 113 (4-29/64) | 142 (5-19/32) | 93 (3-43/64) | 100 (3-15/16) | 120 (4-23/32) | N/A | N/A | 4-M4,4-#8 |

❶ Mounting holes are backward compatible with L10 Disconnect Switches

## L11 Fused Disconnect Switches (100A)

Dimensions are in millimeters (inches). Dimensions not intended for manufacturing purposes.

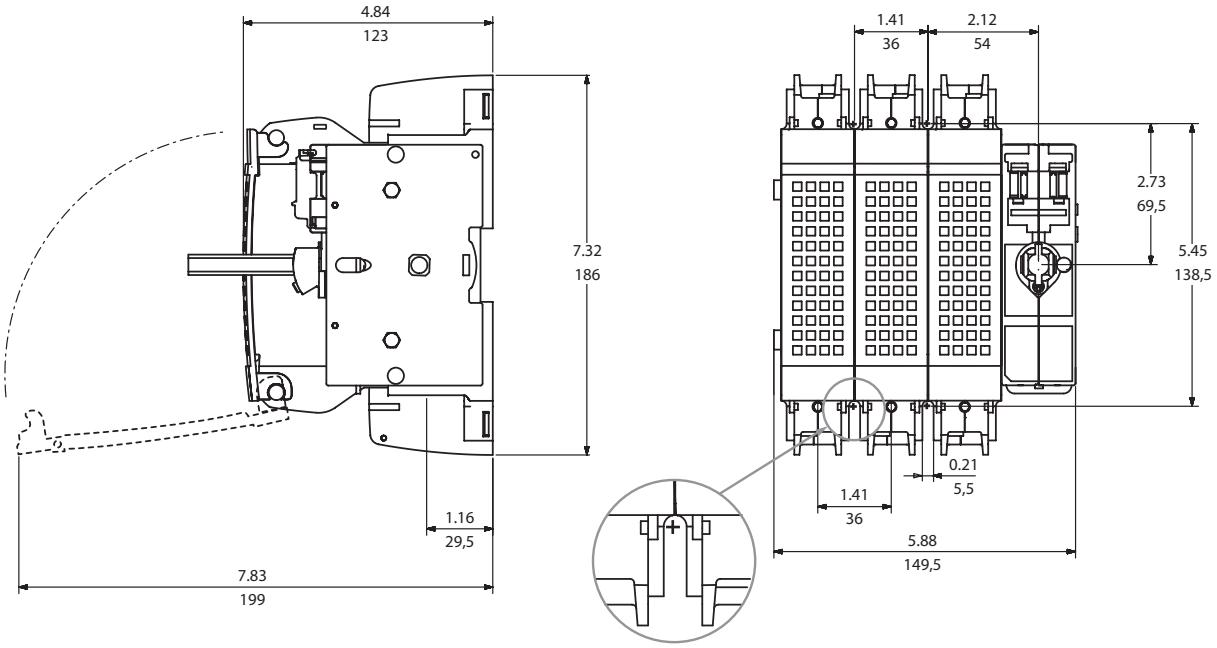


(4) 5.5mm (0.218") mounting slots
hardware supplied by others

## L11 Fused Disconnect Switches (200A)

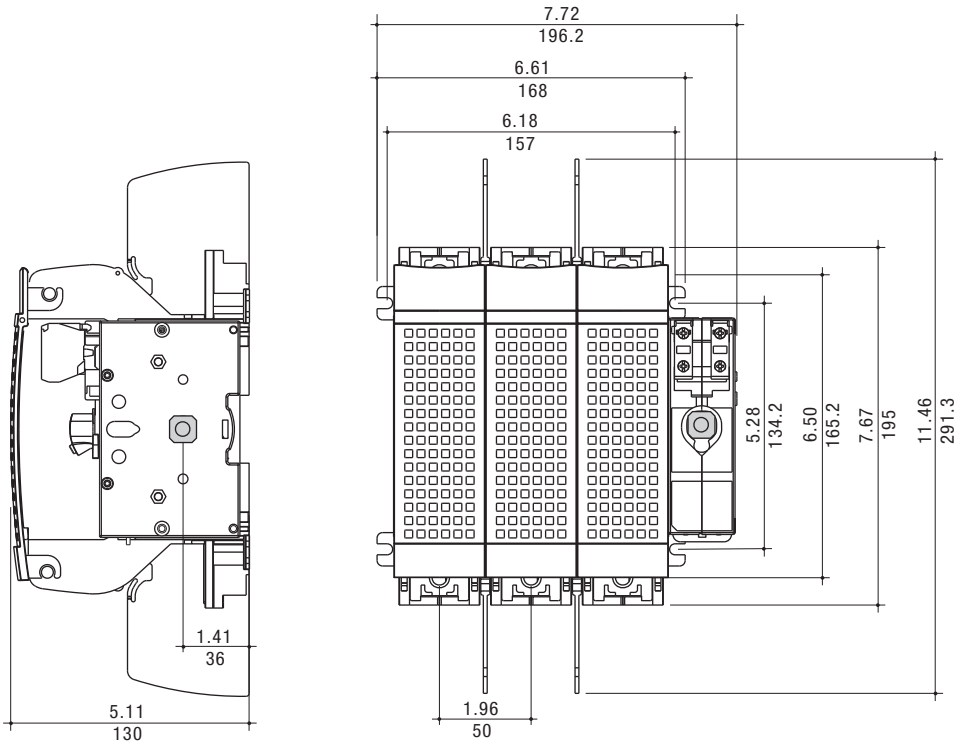

## L11 Fused Disconnect Switches (400A)

Dimensions are in millimeters (inches). Dimensions not intended for manufacturing purposes.

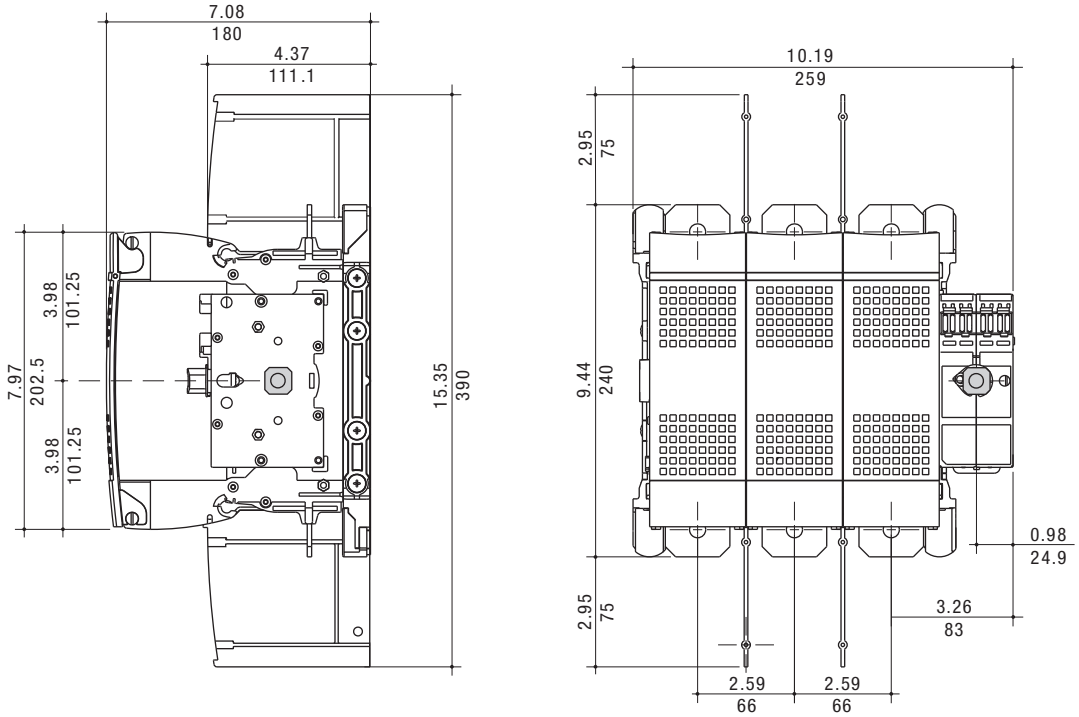


## L11 Fused Disconnect Switches (600…800A)

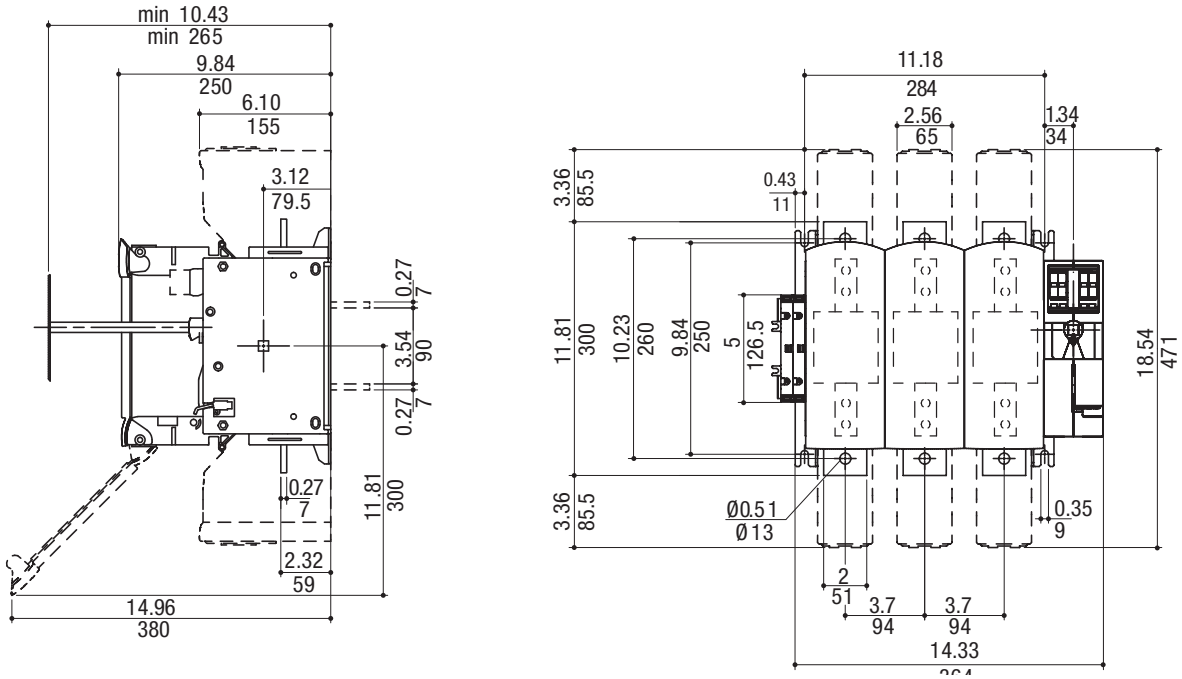

## L11 Non-Fused Disconnect Switches (100…400A)

Dimensions are in millimeters (inches). Dimensions not intended for manufacturing purposes.

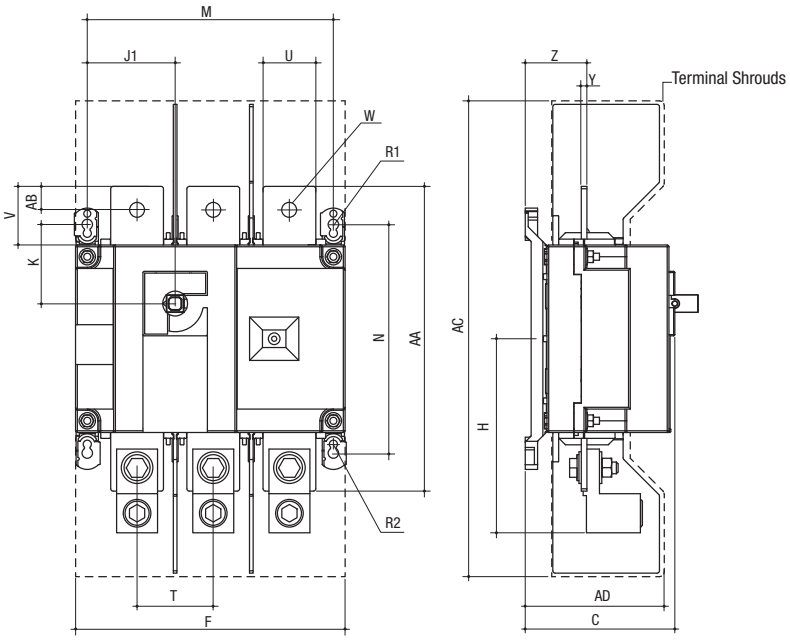


| L11-N… | Dim. Ref. | Approximate Dimensions in mm (in) | | | | | | | | | | | | | |
|---|---|---|---|---|---|---|---|---|---|---|---|---|---|---|---|
| | | Overall | Terminal Shrouds | | Switch Body | | | | | | Switch Mounting | | | | |
| | | C | AC | AD | F (3-pole) | F (4-pole) | H | J1 (3-pole) | J1 (4-pole) | K | M (3-pole) | M (4-pole) | N | R1 | R2 |
| 100 | F1 | 94.6 (3.72) | 256 (10.1) | 77.5 (3.05) | 180 (7.09) | 230 (9.06) | 107 (4.22) | 55 (2.17) | 105 (4.13) | 45.6 (1.8) | 160 (6.3) | 210 (8.7) | 135 (5.31) | 9 (0.35) | 7 (0.27) |
| 200 | | 94.6 (3.72) | 256 (10.1) | 77.5 (3.05) | 180 (7.09) | 230 (9.06) | 107 (4.22) | 55 (2.17) | 105 (4.13) | 45.6 (1.8) | 160 (6.3) | 210 (8.7) | 135 (5.31) | 9 (0.35) | 7 (0.27) |
| 400 | F2 | 128 (4.92) | 406 (16) | 115 (4.15) | 230 (9.05) | 290 (11.4) | 166 (6.53) | 75 (2.95) | 135 (5.31) | 67.5 (2.65) | 210 (8.26) | 270 (10.6) | 195 (7.67) | 9 (0.35) | 7 (0.27) |

| L11-N… | Dim. Ref. | Approximate Dimensions in mm (in) | | | | | | | |
|---|---|---|---|---|---|---|---|---|---|
| | | Connection | | | | | | | |
| | | T | U | V | W | Y | Z | AA | AB |
| 100 | F1 | 50 (1.97) | 25 (0.98) | 30 (1.18) | 11 (0.43) | 3.5 (0.14) | 34.4 (0.14) | 160 (6.3) | 15 (0.6) |
| 200 | | 50 (1.97) | 25 (0.98) | 30 (1.18) | 11 (0.43) | 3.5 (0.14) | 34.4 (0.14) | 160 (6.3) | 15 (0.6) |
| 400 | F2 | 65 (2.56) | 45 (1.77) | 50 (1.97) | 13 (0.51) | 5 (0.2) | 53 (2.08) | 260 (10.2) | 20 (0.8) |

## L11 Non-Fused Disconnect Switches (600A)

Dimensions are in millimeters (inches). Dimensions not intended for manufacturing purposes.

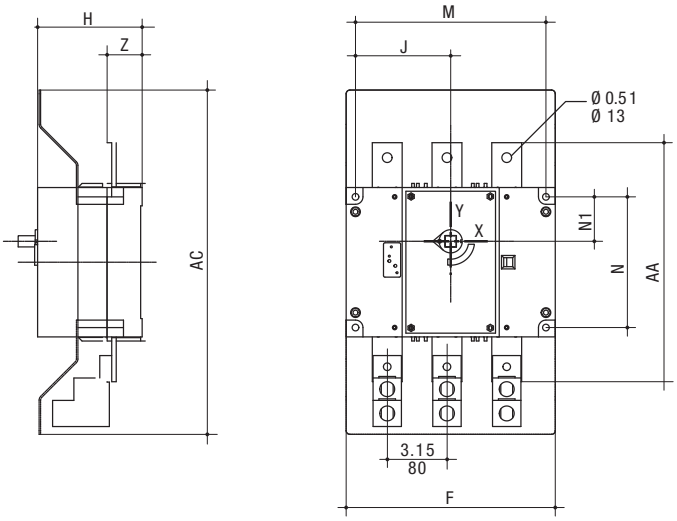


| L11-N… | Dim. Ref. | Approximate Dimensions in mm (in) | | | | | | | | | | | |
|---|---|---|---|---|---|---|---|---|---|---|---|---|---|
| | | Terminal Shrouds | Switch Body | | | | | Switch Mounting | | | | Connection | |
| | | AC | F (3-pole) | F (4-pole) | H | J (3-pole) | J (4-pole) | M (3-pole) | M (4-pole) | N | N1 | AA | Z |
| 600 | F3 | 460 (18.12) | 280 (11) | 360 (14.17) | 140 (5.5) | 127.5 (5) | 167.5 (6.59) | 255 (10.03) | 335 (13.19) | 175 (6.88) | 59.5 (2.34) | 320 (12.6) | 47 (1.85) |

## L11 Non-Fused Disconnect Switches (800…1200A)

Dimensions are in millimeters (inches). Dimensions not intended for manufacturing purposes.

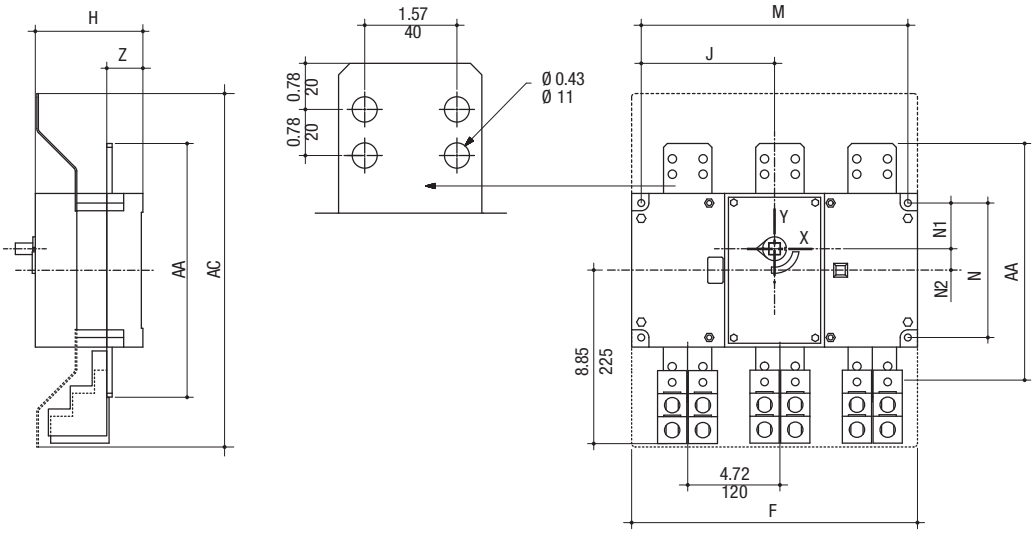


| L11-N… | Dim. Ref. | Approximate Dimensions in mm (in) | | | | | | | | | | | |
|---|---|---|---|---|---|---|---|---|---|---|---|---|---|
| | | Terminal Shrouds | Switch Body | | | | | Switch Mounting | | | | Connection | |
| | | AC | F (3-pole) | F (4-pole) | H | J (3-pole) | J (4-pole) | M (3-pole) | M (4-pole) | N | N1 | AA | Z |
| 800 | F4 | 460 (18.12) | 372 (14.64) | 492 (19.37) | 140 (5.5) | 173.5 (6.83) | 233.5 (9.19) | 347 (13.66) | 467 (18.38) | 175 (6.88) | 59.5 (2.34) | 330 (13) | 47 (1.85) |
| 1200 | | 460 (18.12) | 372 (14.64) | 492 (19.37) | 140 (5.5) | 173.5 (6.83) | 233.5 (9.19) | 347 (13.66) | 467 (18.38) | 175 (6.88) | 59.5 (2.34) | 330 (13) | 47 (1.85) |

## L11 Metal Operating Shaft Dimensions

L11-S1..S2

L11-R7..R8

L11-R9..R12

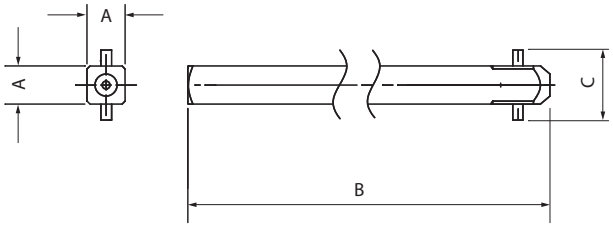


**Typical View**

| Catalog Number | A[2] mm (in) | B mm (in) | C mm (in) |
|---|---|---|---|
| L11-S1 | 6.35 (0.238) | 305 (12) | |
| L11-S2 | 6.35 (0.238) | 533 (21) | |
| L11-R7 | 10 (0.39) | 320 (12.6) | ~ |
| L11-R8 | 10 (0.39) | 580 (22.8) | ~ |
| L11-R9 | 12 (0.47) | 320 (12.6) | 22 (0.87) |
| L11-R10 | 12 (0.47) | 560 (22) | 22 (0.87) |
| L11-R11 | 12 (0.47) | 320 (12.6) | 22 (0.87) |
| L11-R12 | 12 (0.47) | 560 (22) | 22 (0.87) |

## L11-P*/L11-P*T Operating Handles

Dimensions are in millimeters (inches). Dimensions not intended for manufacturing purposes.

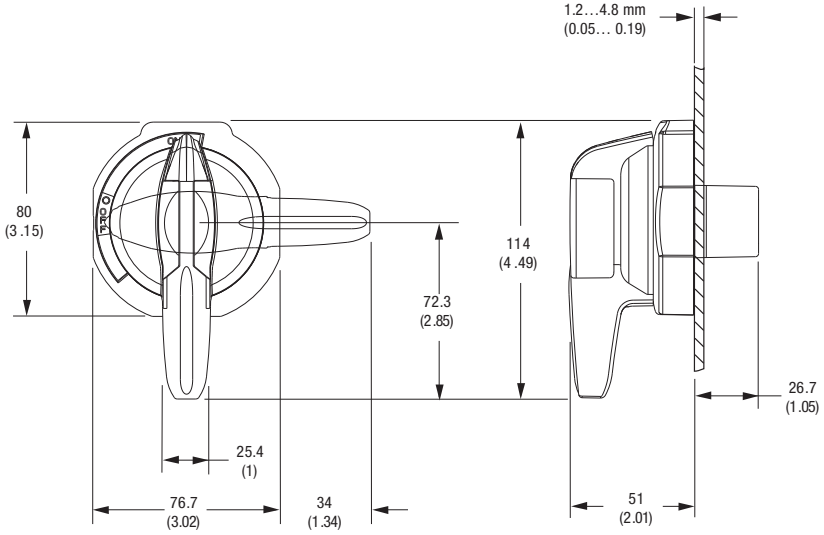


Front

Right Side

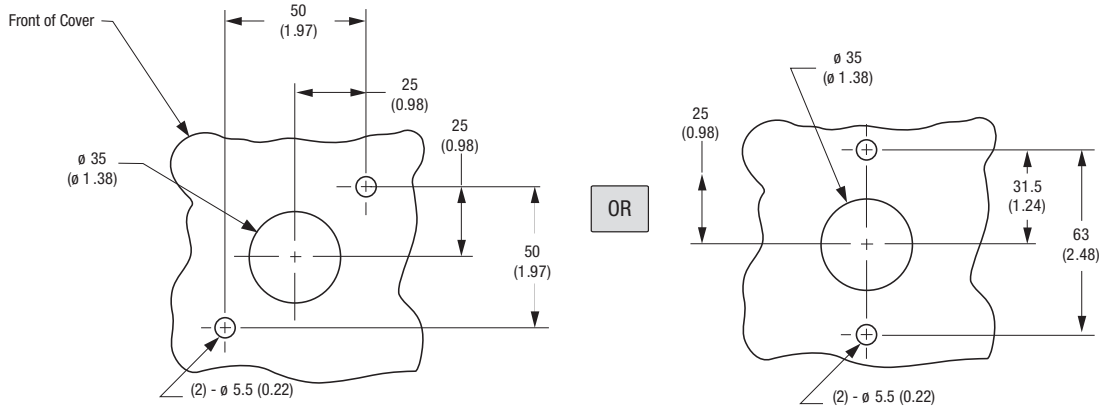

## L10-HM4/HM4E Operating Handles

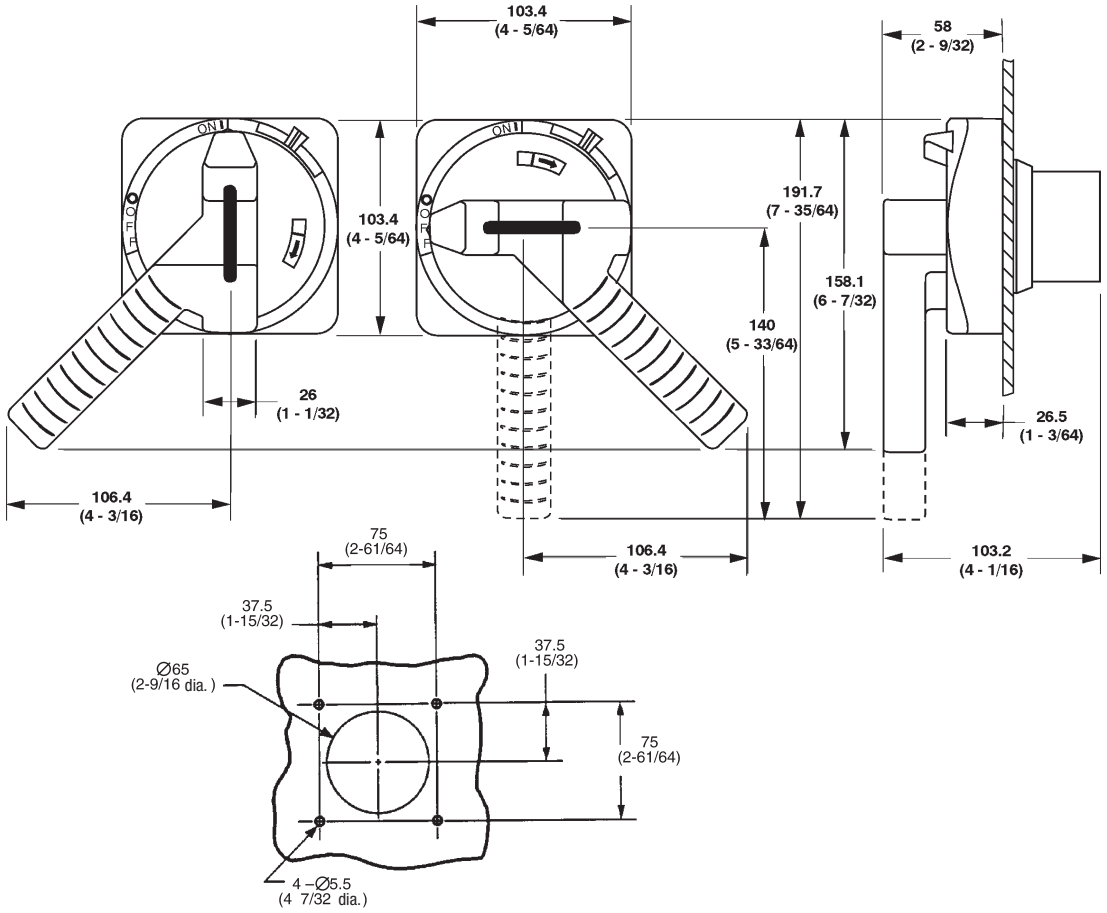


Operating Handles — Cat. No. L10-HM4, -HM4E

## L11-HM4*-L/-N2-L Operating Handles

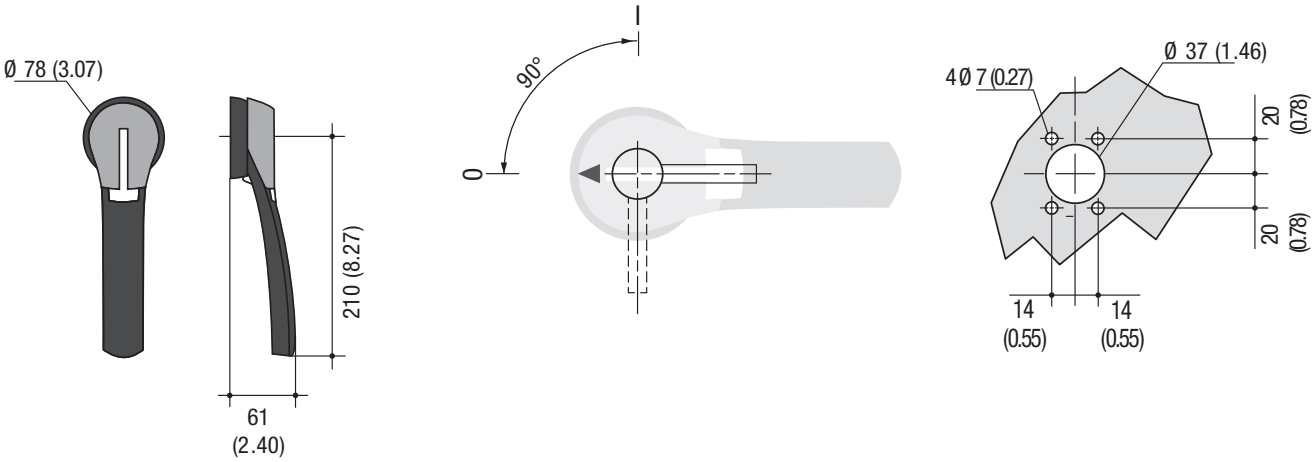

## L11-N1 & L11-N2 Operating Handle (30 & 60A)

Dimensions are in millimeters (inches). Dimensions not intended for manufacturing purposes.

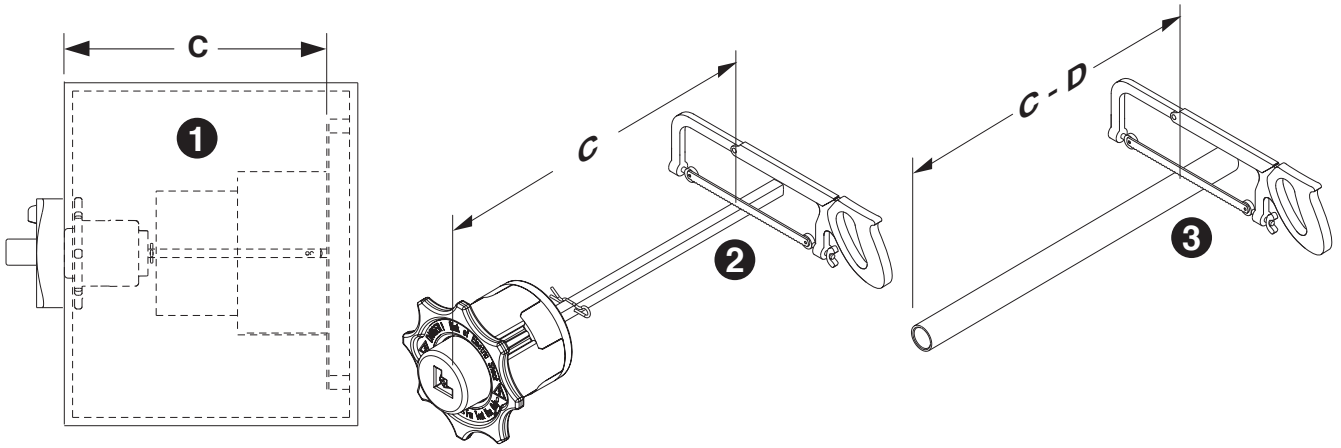


| *Next Generation* L11 | | |
|---|---|---|
| **Disconnect** | **C** | **D** |
| L11-N30-_ _ | ≥ 165 mm<br>6.5 in | 155 mm<br>6.0 in |
| L11-B20-_ _<br>L11-B32-_ _<br>L11-C30-_ _<br>L11-F25-_ _<br>L11-F32-_ _<br>L11-J30-_ _ | ≥ 190 mm<br>7.5 in | |
| L11-N60-_ _ | ≥ 180 mm<br>7.0 in | 170 mm<br>6.75 in |
| L11-B63-_ _<br>L11-D32-_ _<br>L11-D63-_ _<br>L11-F63-_ _<br>L11-H30-_ _<br>L11-H60-_ _<br>L11-J60-_ _ | ≥ 205 mm<br>8.0 in | |

| *Legacy* L10 | | |
|---|---|---|
| **Disconnect** | **C** | **D** |
| L10-NN030_ _ | ≥ 170 mm<br>6.75 in | 140 mm<br>5.5 in |
| L10-NC030_ _<br>L10-NJ030_ _<br>L10-NA100_ _<br>L10-NA200_ _ | ≥ 210 mm<br>8.25 in | |
| L10-NN060_ _ | ≥ 170 mm<br>6.75 in | 115 mm<br>4.5 in |
| L10-NJ060_ _<br>L10-NA300_ _ | ≥ 210 mm<br>8.25 in | |

## L11 Enclosure and Operating Handle Dimensions

Dimensions are in millimeters (inches). Dimensions not intended for manufacturing purposes.

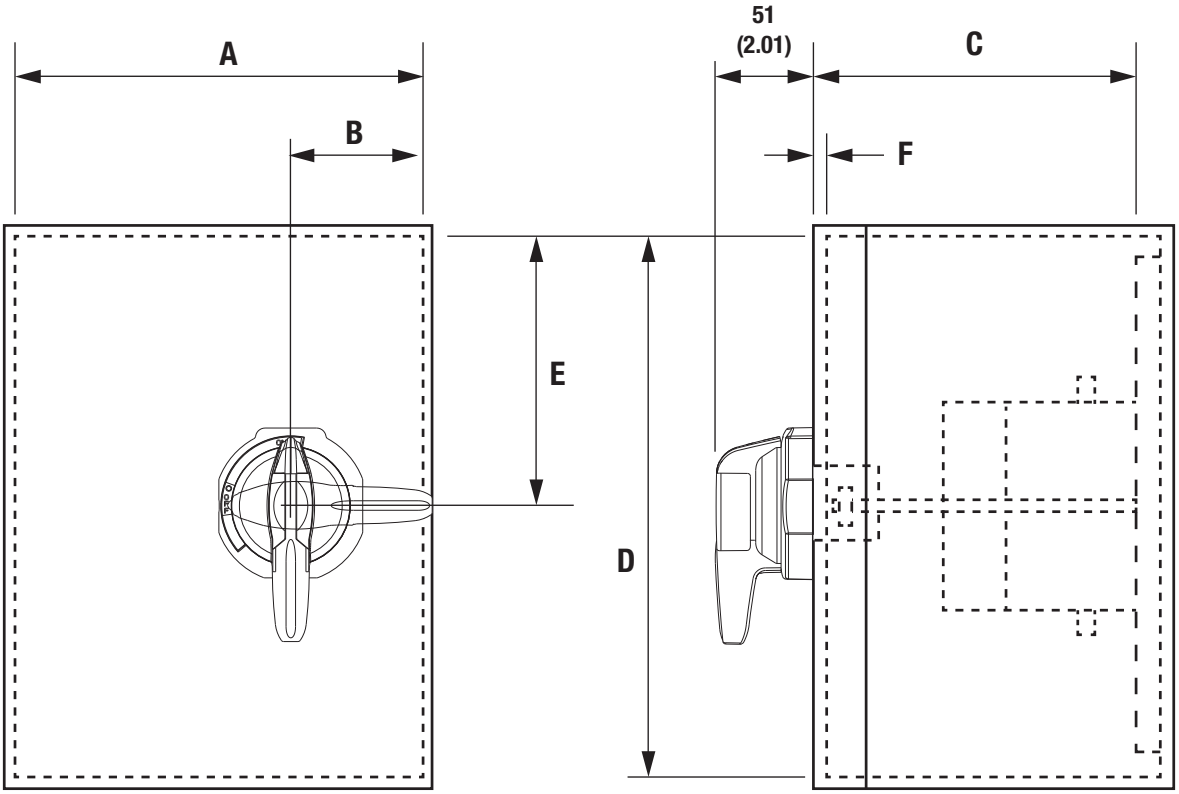


| Catalog Number | Dimension Reference | A | B | C | | D | E | F | |
|---|---|---|---|---|---|---|---|---|---|
| | | Maximum | Minimum | Minimum | Maximum | Minimum | Minimum | Minimum | Maximum |
| L11-C30-1753<br>L11-J30-1753 | A1 | 171 (6-3/4) | 45 (1-49/64) | 147.6 (5-13/16) | 454 (17-7/8) | 248 (9-3/4) | 89 (3-1/2) | 1.4 (1/16) | 4/78 (3/16) |
| L11-N30-1753 | A2 | 171 (6-3/4) | 45 (1-49/64) | 111 (4-3/8) | 454 (17-7/8) | 248 (9-3/4) | 89 (3-1/2) | 1.4 (1/16) | 4/78 (3/16) |
| L11-J60-1753<br>L11-H30-1753<br>L11-H60-1753 | B1 | 197 (7-3/4) | 45 (1-49/64) | 147.6 (5-13/16) | 454 (17-7/8) | 248 (9-3/4) | 105 (4-9/64) | 1.4 (1/16) | 4/78 (3/16) |
| L11-N60-1753 | B2 | 197 (7-3/4) | 45 (1-49/64) | 111 (4-3/8) | 454 (17-7/8) | 248 (9-3/4) | 105 (4-9/64) | 1.4 (1/16) | 4/78 (3/16) |

## L11 Enclosure Installation Dimensions

Dimensions are in millimeters (inches). Dimensions not intended for manufacturing purposes.

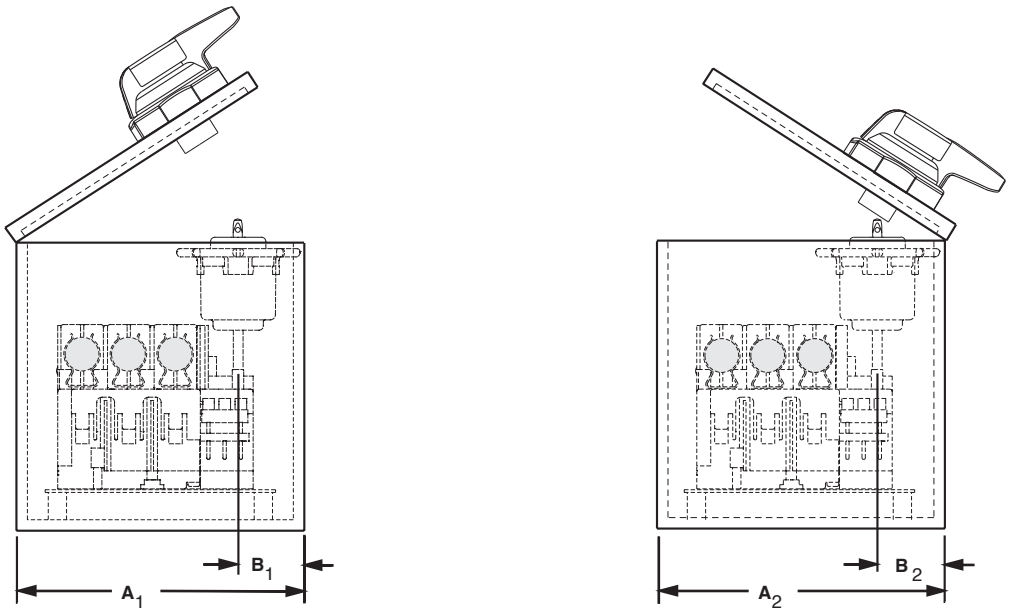


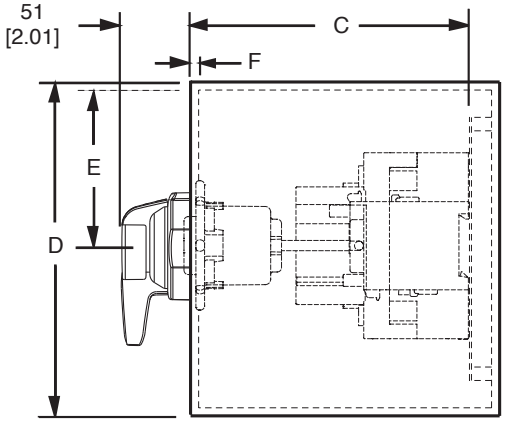


| Catalog Number | Dimension Reference | A1 Min. | A2 Min. | B Min. | B Min. | C Min. | C Max. | D Min. | E Min. | F Min. | F Max. |
|---|---|---|---|---|---|---|---|---|---|---|---|
| L11-C30-1753<br>L11-J30-1753 | A1 | 171<br>(6/3-4) | 203<br>(7-63/64) | 45<br>(1-49/64) | 76<br>(3) | 178<br>(7) | 454<br>(17-7/8) | 248<br>(9-3/4) | 89<br>(3-1/2) | 1.4<br>(1/16) | 4.78<br>(3/16) |
| L11-N30-1753 | A2 | 171<br>(6-3/4) | 203<br>(7-63/64) | 45<br>(1-49/64) | 76<br>(3) | 178<br>(7) | 454<br>(17-7/8) | 248<br>(9-3/4) | 89<br>(3-1/2) | 1.4<br>(1/16) | 4/78<br>(3/16) |
| L11-J60-1753<br>L11-H30-1753<br>L11-H60-1753 | B1 | 197<br>(7-3/4) | 228<br>(8-63/64) | 45<br>(1-49/64) | 76<br>(3) | 178<br>(7) | 454<br>(17-7/8) | 248<br>(9-3/4) | 105<br>(4-9/64) | 1.4<br>(1/16) | 4.78<br>(3/16) |
| L11-N60-1753 | B2 | 197<br>(7-3/4) | 228<br>(8-63/64) | 45<br>(1-49/64) | 76<br>(3) | 178<br>(7) | 454<br>(17-7/8) | 248<br>(9-3/4) | 105<br>(4-9/64) | 1.4<br>(1/16) | 4.78<br>(3/16) |

## Type 3/4/12 - Watertight, Dusttight Sheet Metal Enclosure (30 & 60A)

Dimensions are in millimeters (inches). Dimensions not intended for manufacturing purposes.

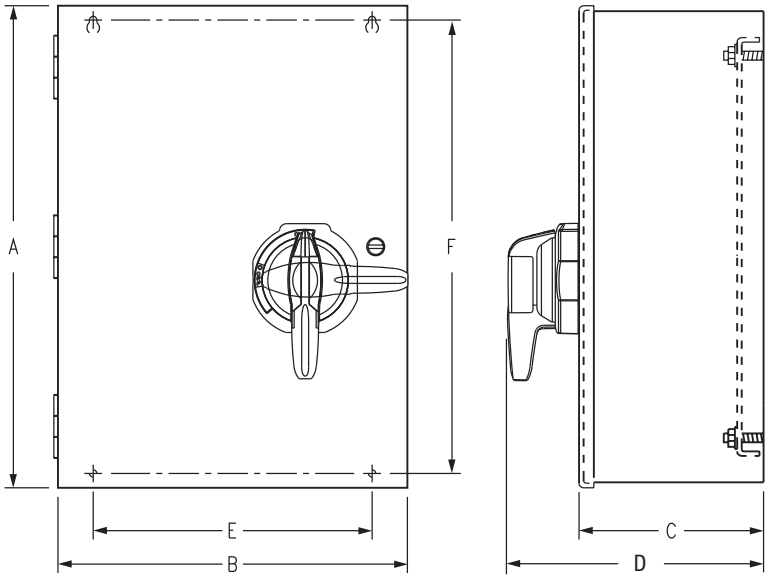


| Amps | Type | Dim. Ref. | A | B | C | D | E | F |
|---|---|---|---|---|---|---|---|---|
| 30 | Fused & Non-fused | A1, A2 | 305 (12.00) | 305 (12.00) | 173 (6.80) | 224 (8.81) | 267 (10.5) | 267 (10.5) |
| 60 | Fused & Non-fused | B1, B2 | 305 (12.00) | 305 (12.00) | 173 (6.80) | 224 (8.81) | 267 (10.5) | 267 (10.5) |

## Type 4/4X Watertight, Corrosion-Resistant Stainless Steel Enclosure (30 & 60A)

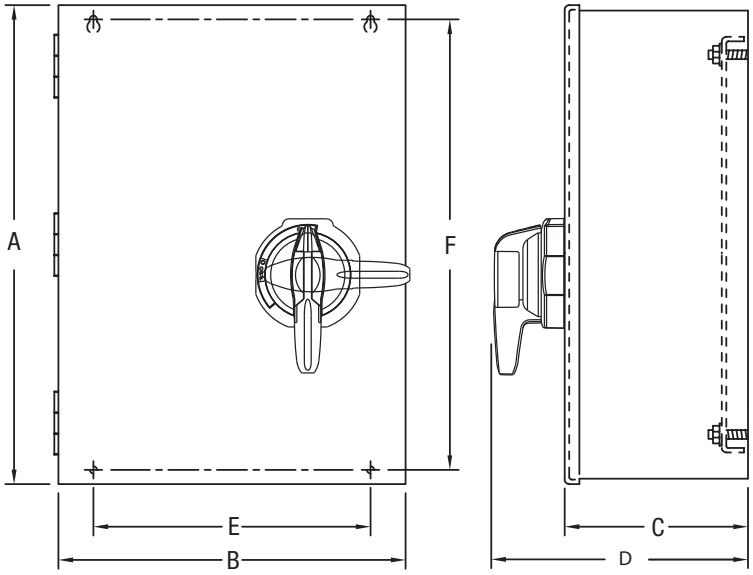


| Amps | Type | Dim. Ref. | A | B | C | D | E | F |
|---|---|---|---|---|---|---|---|---|
| 30 | Fused & Non-fused | A1, A2 | 305 (12.00) | 305 (12.00) | 173 (6.80) | 224 (8.81) | 267 (10.5) | 267 (10.5) |
| 60 | Fused & Non-fused | B1, B2 | 305 (12.00) | 305 (12.00) | 173 (6.80) | 224 (8.81) | 267 (10.5) | 267 (10.5) |

## Type 4/4X - Corrosion Resistant Non-Metallic Enclosure (30 & 60A)

Dimensions are in millimeters (inches). Dimensions not intended for manufacturing purposes.

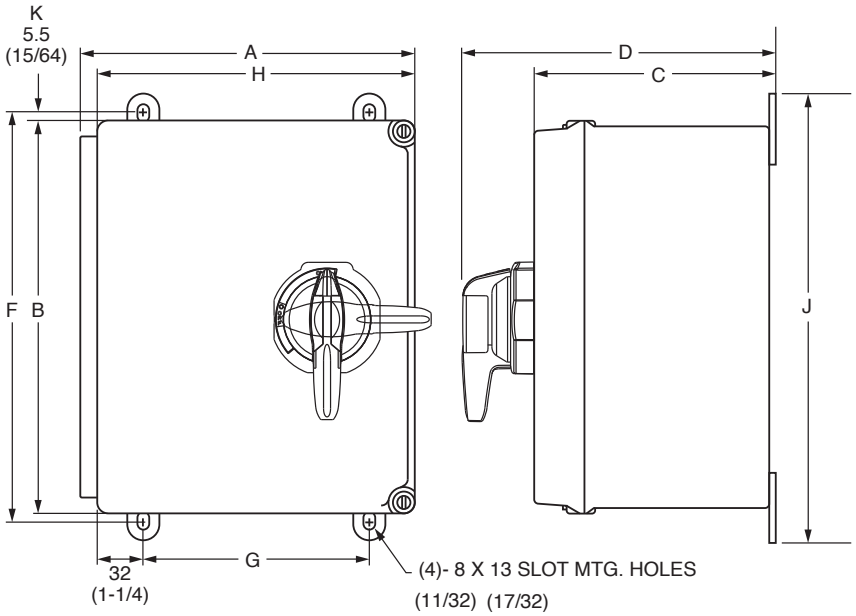


| Amps | Type | Dim. Ref. | A | B | C | D | F | G | H | J | K |
|---|---|---|---|---|---|---|---|---|---|---|---|
| 30 & 60 | Fused & Non-Fused | A1 & A2<br>B1 & B2 | 226<br>(8.92) | 267<br>(10.52) | 163<br>(6.42) | 214<br>(8.43) | 278<br>(10.95) | 152<br>(8.0) | 216<br>(8.50) | 305<br>(12.0) | 6<br>(0.23) |

## Type 4/12 Metallic and Type 4/4X Stainless Steel Enclosure (100A)

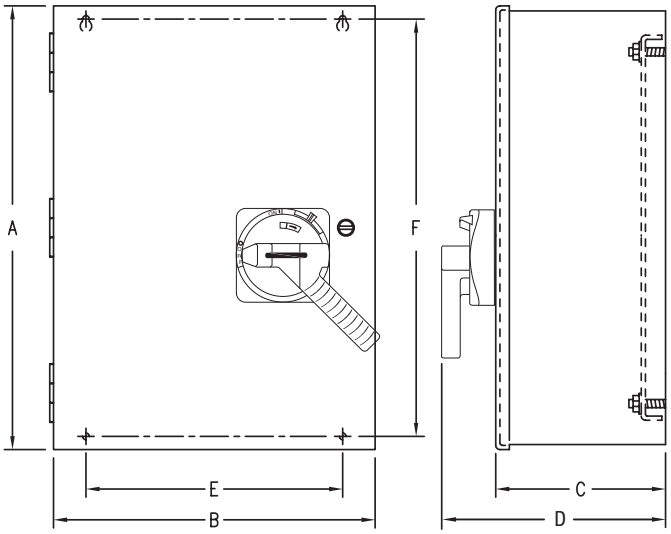


| Amps | Type | Dim. Ref. | A | B | C | D | E | F |
|---|---|---|---|---|---|---|---|---|
| 100 | Fused & Non-fused | C1 | 406<br>(16.00) | 406<br>(16.00) | 224<br>(8.80) | 282<br>(11.10) | 368<br>(14.5) | 368<br>(14.5) |

## Type 4/12 Metallic and Type 4/4X Stainless Steel Enclosure (200 & 400A)

Dimensions are in millimeters (inches). Dimensions not intended for manufacturing purposes.

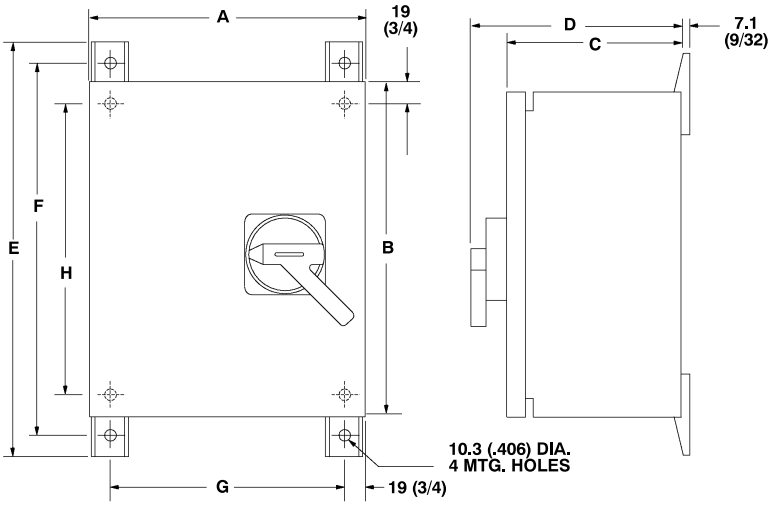


| Amps | Type | Dim. Ref. | A | B | C | D | E | F | G | H |
|---|---|---|---|---|---|---|---|---|---|---|
| 200 | Fused & Non-Fused | D1 | 406 (16) | 610 (24) | 224 (8-51/64) | 282 (11-5/64) | 688 (27-5/64) | 650 (25-19/32) | 368 (14-1/2) | 572 (22-1/2) |
| 400 | Fused & Non-Fused | F1 | 610 (24) | 762 (30) | 326 (12-51/64) | 384 (15-5/64) | 840 (33-5/64) | 802 (31-15/32) | 572 (22-1/2) | 724 (28-1/2) |

## Type 4/4X Corrosion Resistant Non-Metallic Enclosure (100A)

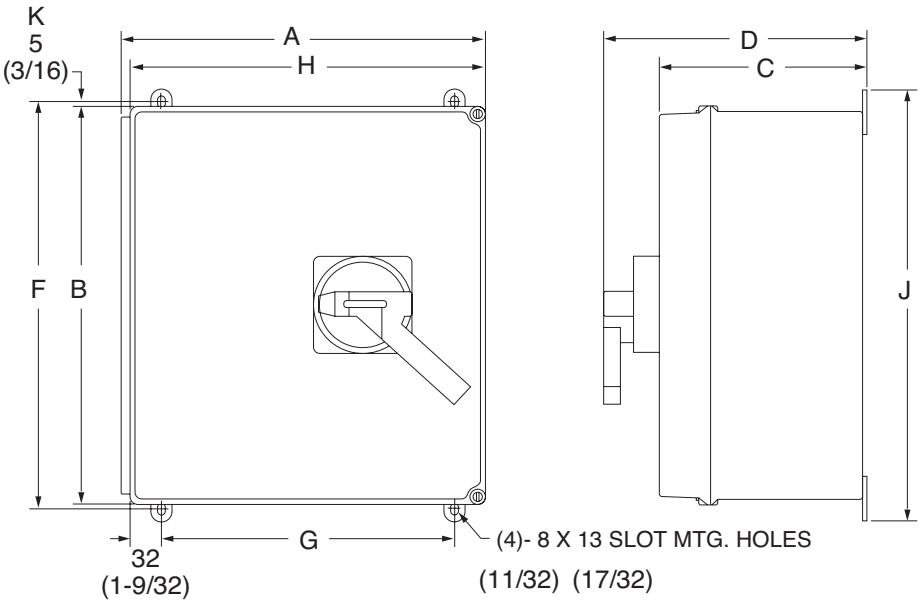


| Amps | Type | Dim. Ref. | A | B | C | D | F | G | H | J | K |
|---|---|---|---|---|---|---|---|---|---|---|---|
| 100 | Fused & Non-Fused | C1 | 380 (14-31/32) | 420 (16-1/4) | 215 (8-31/64) | 273 (10-49/64) | 430 (16-61/64) | 305 (12) | 370 (14-9/16) | 457 (18) | 5 (13/64) |

## Type 4/4X Corrosion Resistant Non-Metallic Enclosure (200A)

Dimensions are in millimeters (inches). Dimensions not intended for manufacturing purposes.

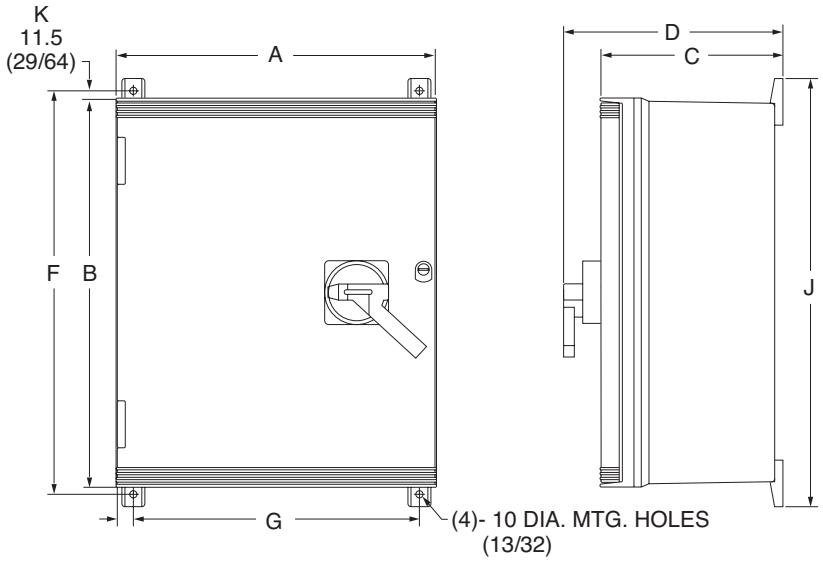


| Amps | Type | Dim. Ref. | A | B | C | D | F | G | J | K |
|---|---|---|---|---|---|---|---|---|---|---|
| 200 | Fused & Non-Fused | D1 | 513 (20-13/64) | 625 (24-5/8) | 292 (11-31/64) | 350 (13-25/32) | 648 (25-1/2) | 457 (18) | 686 (27) | 11.5 (29/64) |

## Type 4/4X Corrosion Resistant Non-Metallic Enclosure (400A)

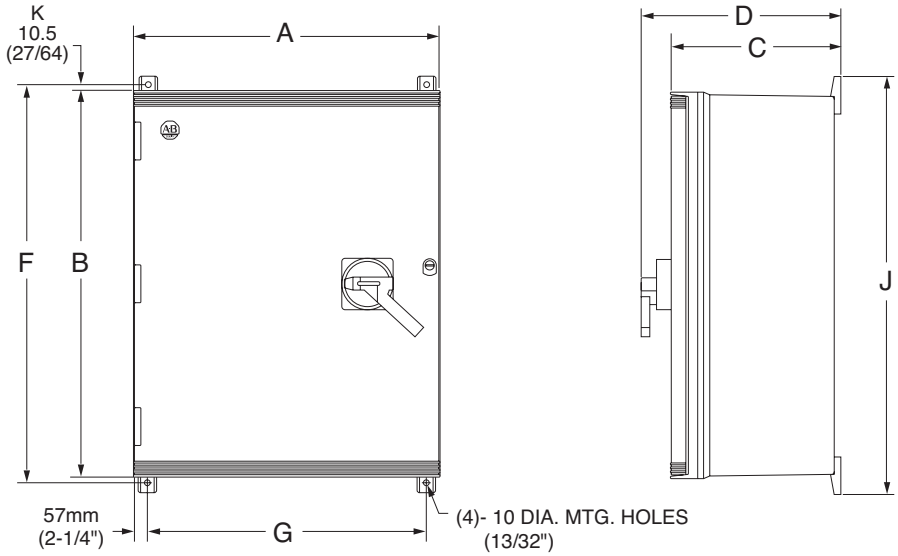


| Amps | Type | Dim. Ref. | A | B | C | D | F | G | J | K |
|---|---|---|---|---|---|---|---|---|---|---|
| 400 | Fused & Non-Fused | F1 | 612 (24 1/8) | 775 (30 33/64) | 343 (13 31/64) | 401 (15 23/32) | 796 (31 31/32) | 555 (21 7/8) | 834 (32 27/32) | 10.5 (13/32) |